TEAC

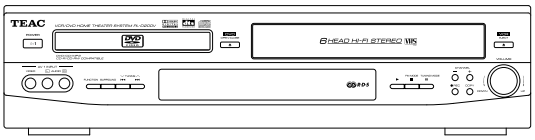

SERVICE MANUAL

PL-D200V

VCR/DVD HOME THEATER SYSTEM

DVD VIDEO · DOLBY DIGITAL PRO LOGIC II · DIGITAL dts SURROUND · COMPACT disc DIGITAL AUDIO · VHS PAL

CONTENTS

SPECIFICATIONS 2
DISASSEMBLY 6
PRINCIPAL PARTS LOCATION 7
BLOCK DIAGRAM 9
TROUBLE SHOOTING 11
PRINTED CIRCUIT BOARDS 15
WIRING DIAGRAM 29
EXPLODED VIEW 31
ELECTRICAL PARTS LIST 43
IC INTERNAL DIAGRAMS 88
IC AND TRANSISTOR VOLTAGE CHART 131
SCHEMATIC DIAGRAMS 141
ADJUSTMENT METHOD 155

CAUTION

- ⚠ Parts marked with this sign are safety critical components. They must be replaced with identical components - refer to the appropriate parts list and ensure exact replacement.
- Before returning appliance to the customer, make leakage-current or resistance measurements to determine that exposed parts are acceptably insulated from the supply circuit.

Effective : September, 2003

SPECIFICATIONS

AMPLIFIER Section

Output Power (6 ohms, 1KHz, 1% T.H.D) : Stereo		
Front L/R	(2 Channel Driven)	45W x 2ch
Output Power (6 ohms, 1KHz, 1% T.H.D)		
Front L/R	(2 Channel Driven)	45W x 2ch
Center	(1 Channel Driven)	45W x 1ch
Rear L/R	(2 Channel Driven)	45W x 2ch
Subwoofer	(1 Channel Driven)	45W x 1ch
S/N Ratio (IHF-A Weighted)		
1 Channel Driven		>65dB
Frequency Response		
Front L/R (Large)		120~20KHz (-3dB point)
Center (Large)		120~20KHz (-3dB point)
Rear L/R (Large)		120~7KHz (-3dB point)
Subwoofer		10~150Hz (-3dB point)
Tone Control		
Bass (100Hz)		±6dB
Treble (10KHz)		±6dB
Input Sensitivity		
Stereo (1KHz)		260mV~360mV
CH Separation		
Stereo (1KHz)		> 50dB
FM TUNER Setion		
Frequency Range		87.5~108 MHz
Sensitivity		
Mono		8uV/m, EMF
Distortion		
Mono		≤ 0.5%
Stereo		≤ 1%
S/N Ratio		
Mono		≥ 65dB
Stereo		≥ 60dB

DVD Section (TDV-540)

Composite Output Level	1.0V (p-p), 75ohm
S-Video Y-Output Level	1.0V (p-p), 75ohm
S-Video C-Output Level	280mV (p-p), 75ohm

VCR (audio) Section [Hi-Fi]

Output Level	
Audio -8dBm (E.E)	-8±2dBm
Distortion (T.H.D)	
Audio -8dBm (SP)	1.0 ↓ %
Audio -8dBm (LP/SLP)	1.5 ↓ %
S/N Ration	
Audio -8dBm (E.E)	50 ↑ %
Audio -8dBm (SP)	55 ↑ %
Audio -8dBm (LP/SLP)	55 ↑ %

VCR (video) Section

E.E Video Level	1.0±0.2V
SRP SYNC Level	0.3±0.03V
SRP BURST Level	0.3±0.03V
SRP Video Level	1.0±0.2V

GENERAL

Power Consumption	110W
Weight (Main unit)	9.42Kg
Dimension (WxHxD)	430x107x422

NOTE: Design and specifications are subject to change and improvement without notice

SAFETY PRECAUTIONS

The following check should be performed for the continued protection of the customer and service technician.

LEAKAGE CURRENT CHECK

Measure leakage current to a known earth ground (water pipe, conduit, etc.) by connecting a leakage current tester between the earth ground and all exposed metal parts of the appliance (input/output terminals, screwheads, metal overlays, control shaft, etc.). Plug the AC line cord of the appliance directly into a 120V AC 60Hz outlet and turn the AC power switch on. Any current measured must not exceed 0.5mA.

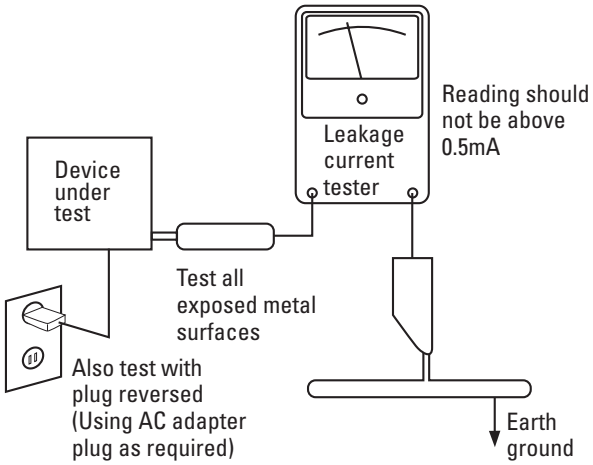

AC Leakage Test

ANY MEASUREMENTS NOT WITHIN THE LIMITS OUTLINED ABOVE ARE INDICATIVE OF A POTENTIAL SHOCK HAZARD AND MUST BE CORRECTED BEFORE RETURNING THE APPLIANCE TO THE CUSTOMER.

LASER BEAM SAFETY PRECAUTIONS

CLASS 1 LASER PRODUCT

DANGER
INVISIBLE LASER RADIATION
AVOID DIRECT EXPOSURE TO BEAM

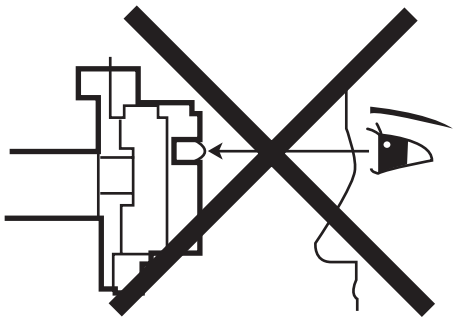

Do not look directly at the laser beam coming from the pickup or allow it to strike against your skin.

This Receiver uses a pickup that emits a laser beam.

The laser beam is emitted from the location shown in the figure. When checking the laser diode, be sure to keep your eyes at least 1 foot away from the pickup lens when the diode is turned on. Do not look directly at the laser beam.

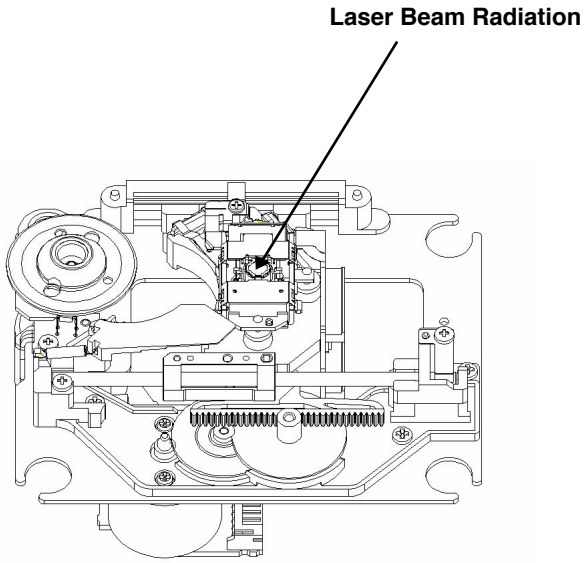

Caution: Use of controls and adjustments, or doing procedures other than those specified herein, may result in hazardous radiation exposure.

HANDLING LASER PICKUP

The laser diode in the optical system of this receiver can be damaged by electrostatic discharge from clothes, body, etc. Proper electrostatic grounding for service personnel is required during servicing.

BEFORE REPAIRING THE DVD MECHANISM

a. Human Body Grounding:
Many of the components used in this compact disc player, including the laser pickup, are sensitive to electrostatic discharge.
Service personnel should be grounded with an electrostatic armband (1M ohm).

INCORRECT

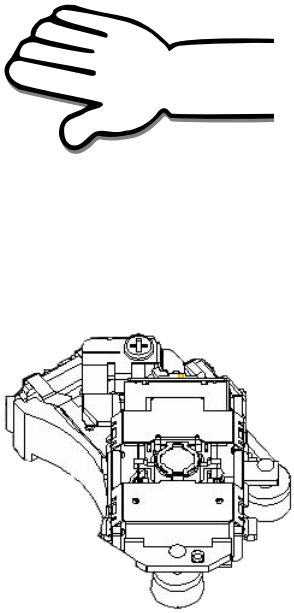

CORRECT

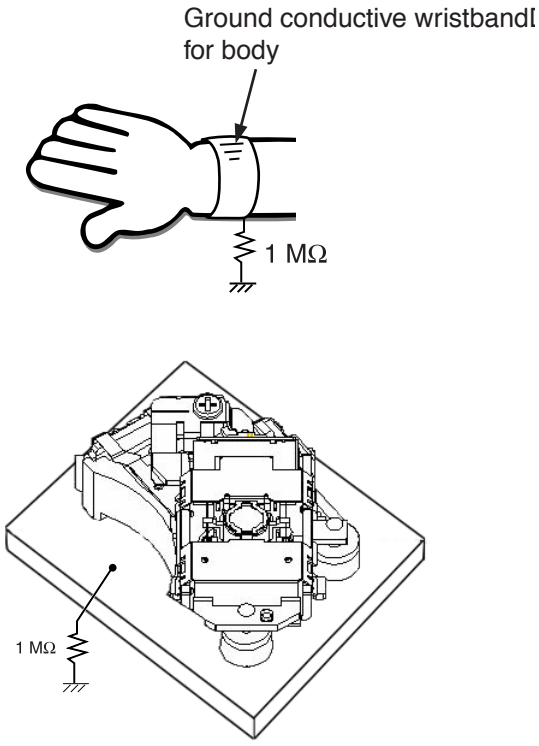

Caution: Static charge on clothing does not escape through a body grounding wristband. Be careful not to contact the pickup or electrical components with your clothing.

b. Workbench and Tool Grounding:
A properly-grounded electroconductive plate (1 M ohm) or metal sheet should be fitted to the workbench surface.
Tools and instruments (soldering irons, scopes, etc.) should be grounded to prevent AC leakage.

c. Make two standard ESD solder bridges on the Laser optic PC Board
Before disassembly of mechanism or disconnect any cables in it, make two standard ESD solder bridges on the laser optic PC Board.

DISASSEMBLY

1) REMOVAL OF TOP COVER

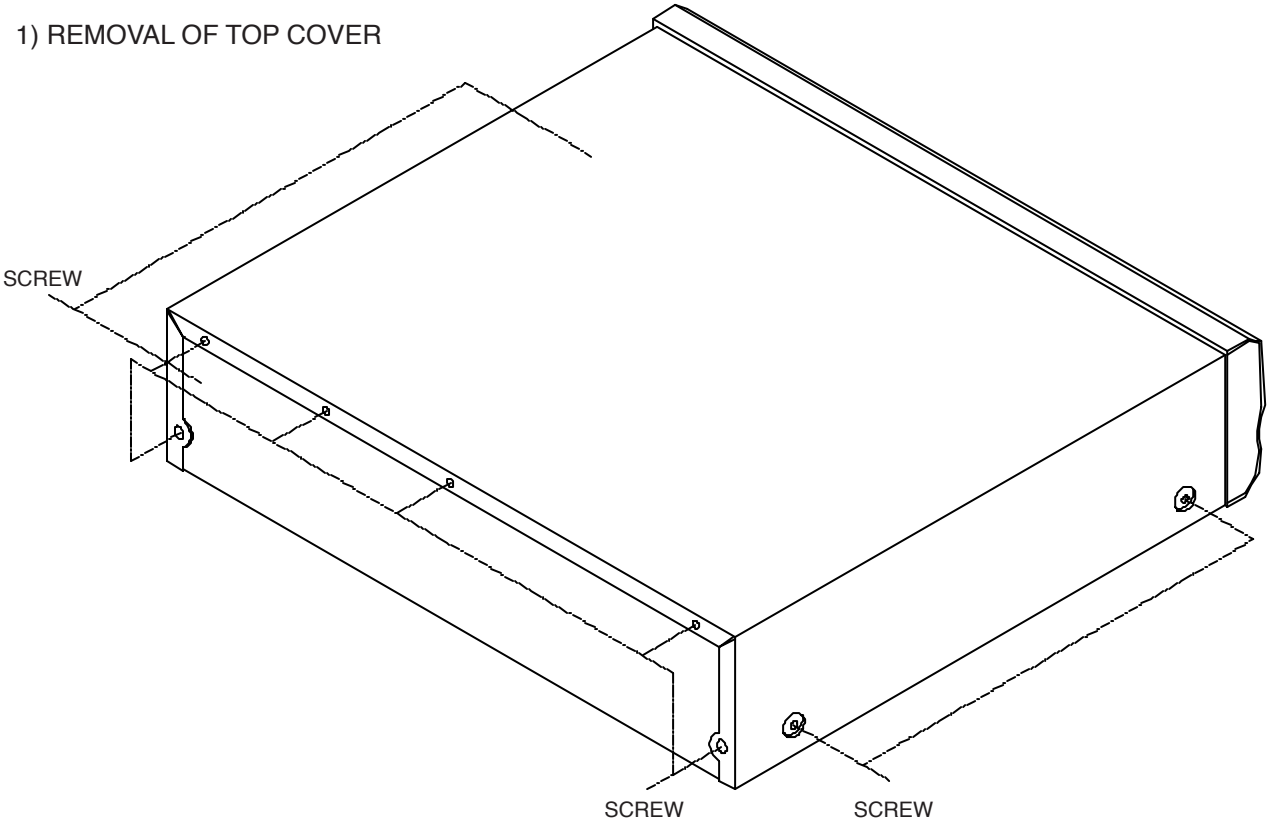

2) REMOVAL OF FRONT PANEL

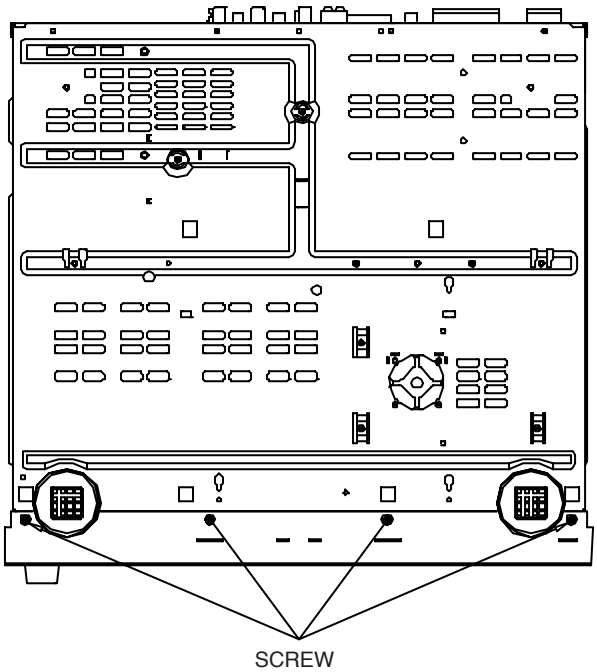

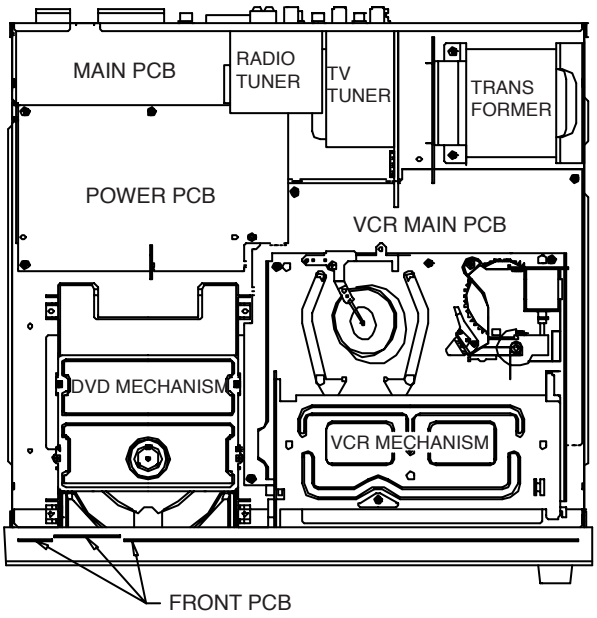

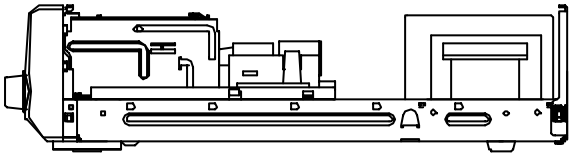

PRINCIPAL PARTS LOCATION

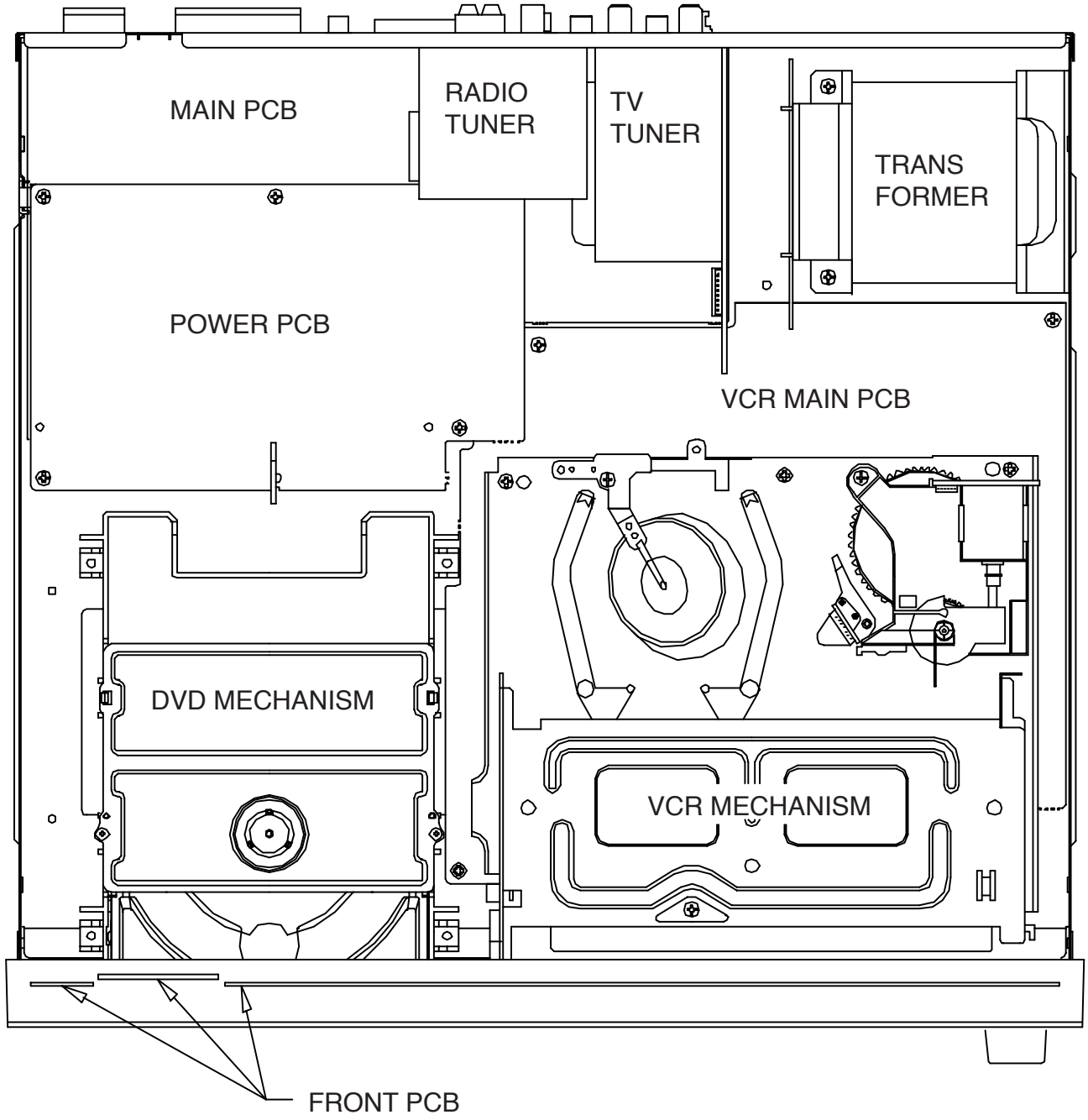

BLOCK DIAGRAM

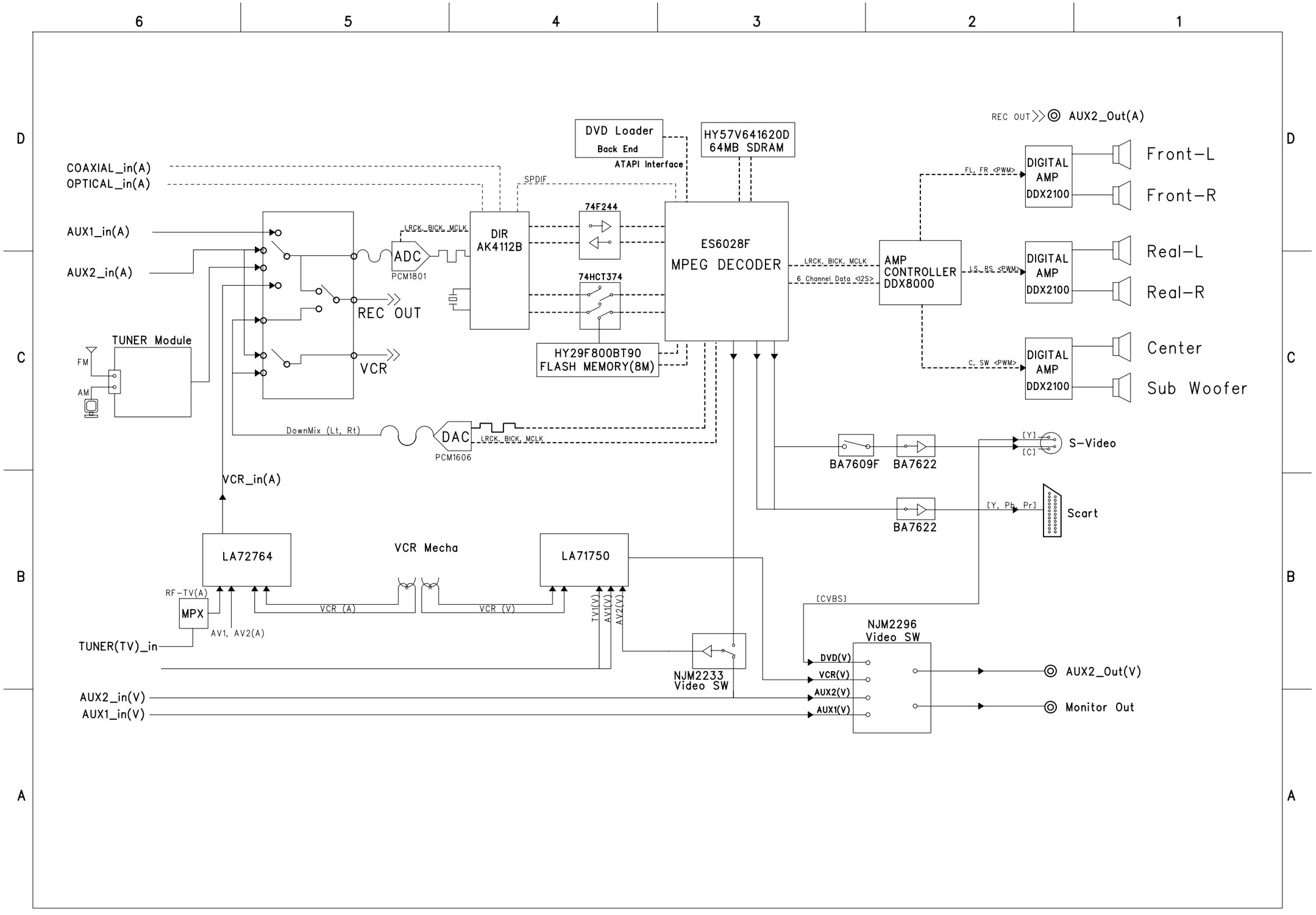

TROUBLE SHOOTING

Incorrect operation is often mistaken for trouble and malfunctions. If you think that there is something wrong with this component, check the points below. Sometimes the trouble may lie in another component. Investigate the other components and electrical appliances being used.

Symptom	Cause	Remedy
No power.	The power cord is disconnected.	Plug the power cord into the wall outlet securely.
The power is on, but the DVD player does not work.	No disc is inserted.	Insert a disc. (Check that the DVD or audio CD indicator in the DVD display is lit.)
No picture.	The TV is not set to receive DVD signal output.	Select the appropriate video input mode on the TV so the picture from the DVD player appears on the TV screen.
	The video cable is not connected securely.	Connect the video cable into the jacks securely.
	The connected TV power is turned off.	Turn on the TV.
The playback picture is poor.	The disc is dirty.	Clean the disc.
The DVD player does not start playback.	No disc is inserted.	Insert a disc. (Check that the DVD or CD indicator in the display panel is lit.)
	The DVD player cannot read the disc because it is damaged or an incorrect type (for example, a CD-i).	Check the disc type, color system and regional code. Check for any scratches or smudge on the disc. Insert a readable disc.
	The disc is placed upside down.	Place the disc with the playback side down.
	The disc is not placed within the guide.	Place the disc on the disc tray correctly inside the guide.
	The disc is dirty.	Clean the disc.
	A menu is on the TV screen.	Press **SETUP** to turn off the menu screen.
	The rating level is set.	Cancel the rating function or change the rating level.
The remote control does not work properly.	The remote control is not pointed at the remote sensor of the unit.	Point the remote control at the remote sensor of the unit.
	The remote control is too far from the unit.	Operate the remote control within about 23 feet (7 m).
	There is an obstacle in the path of the remote control and the DVD player.	Remove the obstacle.
	The remote's batteries are exhausted.	Replace the batteries with new ones.
	Other function is selected.	Press the function key what you want to operate.

Symptom	Cause	Remedy
The receiver does not respond when the buttons are pressed.	Static electricity caused by dry air.	Disconnect the power plug from the outlet, and insert again.
No sound is output when a function is selected.	Improper connections	Make sure the component is connected correctly.
	Sound is muted.	Press the remote's MUTE.
	The volume is turned down.	Adjust VOLUME.
No image is output when a function is selected.	Improper connections.	Make sure the component is connected correctly.
	The input source is not properly selected.	Press the correct function button.
Considerable noise in radio broadcasts.	Incorrect frequency.	Tune in the correct frequency.
	The antenna is not connected.	Connect the antenna.
	□□ RF (AC-3) and/or digital cables are near the antenna terminals and wires.	Route □□ RF (AC-3) and digital cables away from the antenna terminals and wires.
	(For FM) The FM antenna is not fully extended or is poorly positioned.	Fully extend the FM wire antenna, position for best reception, and secure to a wall.
	(For FM) The signal is weak.	Connect an outdoor FM antenna.
	Interference caused by other equipment (for example, fluorescent lights, motors).	Turn off the equipment causing the noise or move it away from the receiver.
		Place the antenna farther away from the equipment causing the noise.
Broadcast stations cannot be selected automatically.	The signals are weak.	Connect an outdoor antenna.
The display is dark.	The dimmer or sleep timer are on.	Press DIMMER again.
When listening to the music in stereo, left/ right speakers sounds are reversed.	Speakers are connected wrong.	After checking, if needed, reconnect.
Low hum or buzz sound.	Power line of a fluorescent light is installed near the receiver.	Place the receiver as far away as possible from electric devices with interference.
Sound is only heard from one channel.	One of the input cords is disconnected.	Connect the input cords securely.
	The channel level is set to one side.	Adjust the channel level.
Sound cuts off or there is no sound even though power is on.	Speaker impedance is less than prescribed for this unit.	After turning off the power and then turning it on again, reduce the volume or change to the correct 6-ohm speakers.
Low bass response.	Speaker polarity(+/–) is reversed.	Check all speakers for correct polarity.

■ TEST MODE

TEST Mode shows the infomation as follows.

I. Back End Version (It is to express each Buyer, each model, and version number.)
II. Front End Version (It is to display the Mecha Fimware version number.)
III. Back End Build time (It can be used to seperate each B/E firmware version by the day.)
IV. Region No.(It is only to display region code.)

[operation]

To enter the first state of test mode, first open DISC. (Press OPEN key.)

then, press key on the remote unit as follows.
[CLEAR] - [2] - [5] - [8] -[0] - [CLEAR]

If you press key correctly, you will see the message below.

BE VER	MODEL No.	- (I : B/E version)
FE VER	61-500101	- (II : F/E version)
BUILD TIME	20030510B	- (III : B/E bulid time)
REGION	xx	- (IV : Region Number)

<B/E Firmware update> : Function 2

The update is done with CD-R. (When the firmware is changed, the updated firmware will be provided by Anam on CD-R)

Put the DISC in at the first state of service mode and then press the PRGM key on the remote unit.
Updating will begin as follows.
ERASE -> WRITE -> DONE

You'll see the update sequence on the TV screen.

ERASE >>>>>>>>>>>>>
WRITE >>>>>>>>>>>>>
DONE

When the TV screen's display goes off, turn the POWER OFF.
Turn the POWER ON and then DO EEPROM CLEAR.

<F/E Firmware update> : Function 3

The update is done with CD-R. (When the firmware is changed, the updated firmware will be provided by Anam on CD-R)
- Put the disc on OPEN at normal operation mode.
- Press PLAY on the remote.
- After about 30 seconds, DVD door will be open.
- Turn the power off.
- Turn the power on and open DISC
- Remove the disc.

Note: F/E update method has another method. It is that you can update in the normal mode, same sequence, same method. Updating in the normal mode is recommandable because of updating during the short time. In this case, you must confirm the F/E firmware version.

FRONT BOARD

CUP11642Z

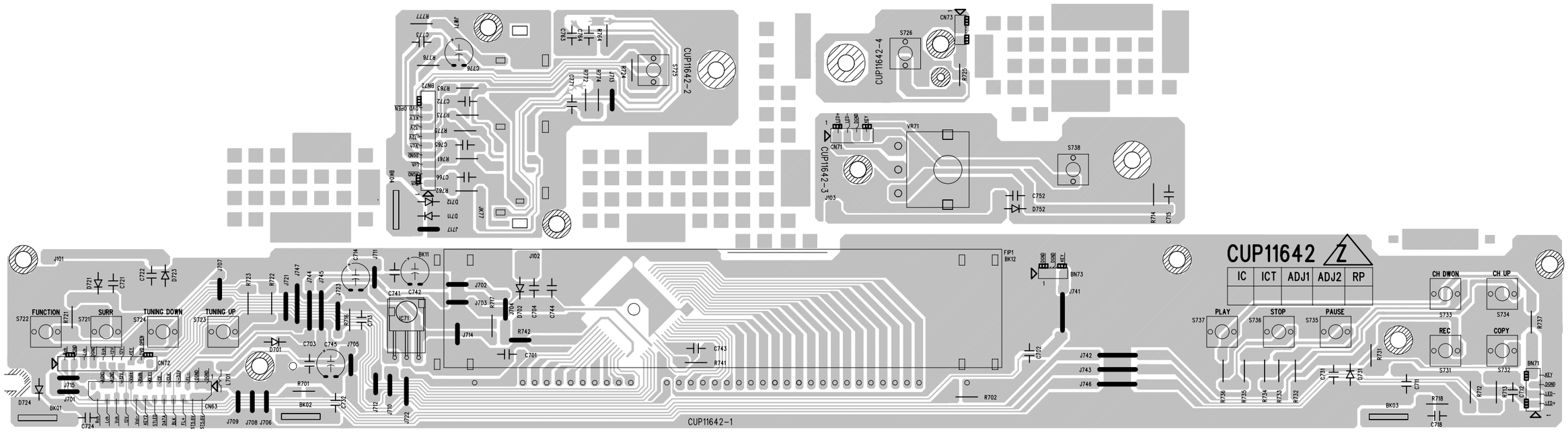

POWER BOARD

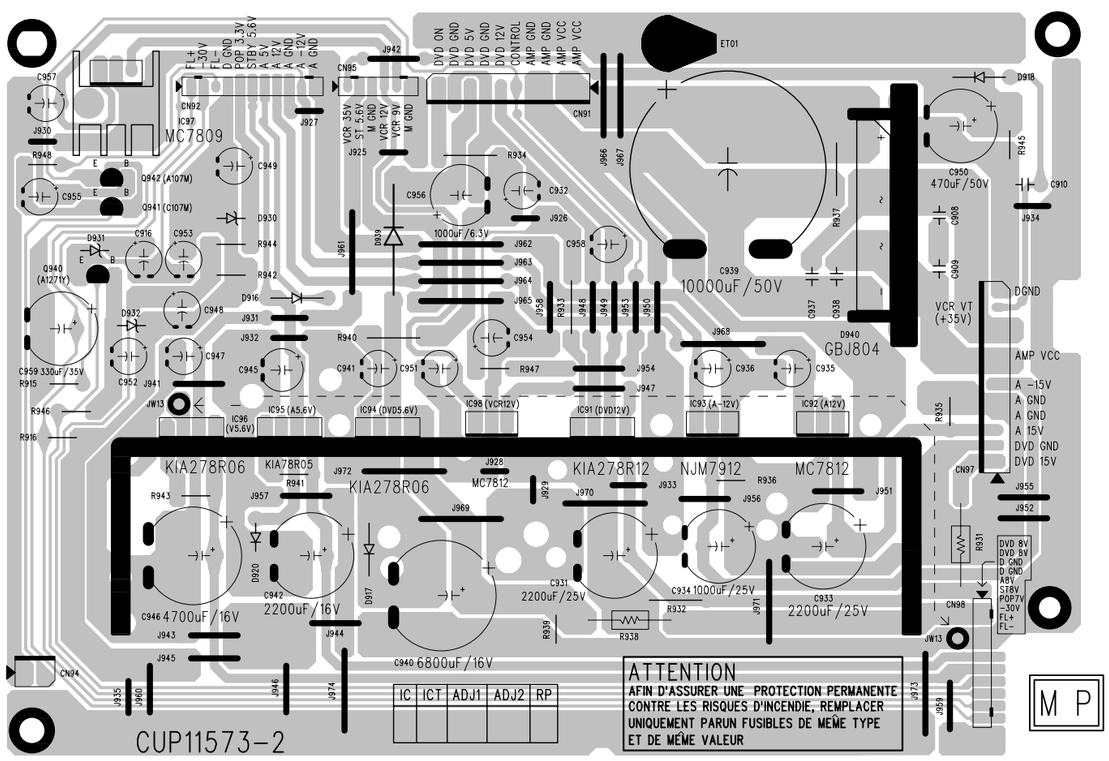

CENTER BAR

CUP11573Z

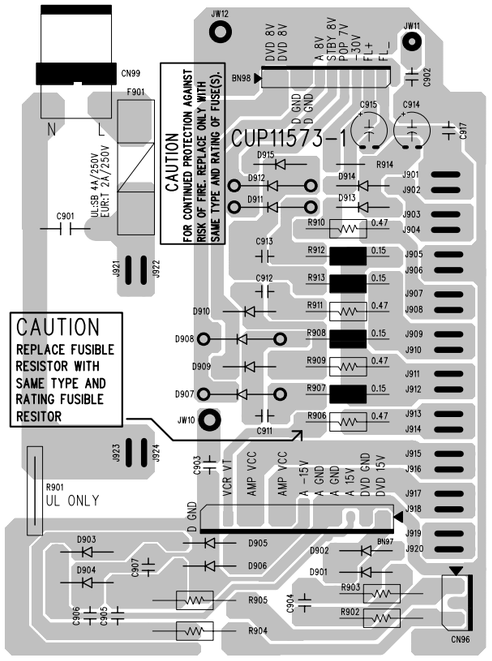

MAIN BOARD

TOP VIEW

CUP11571Z

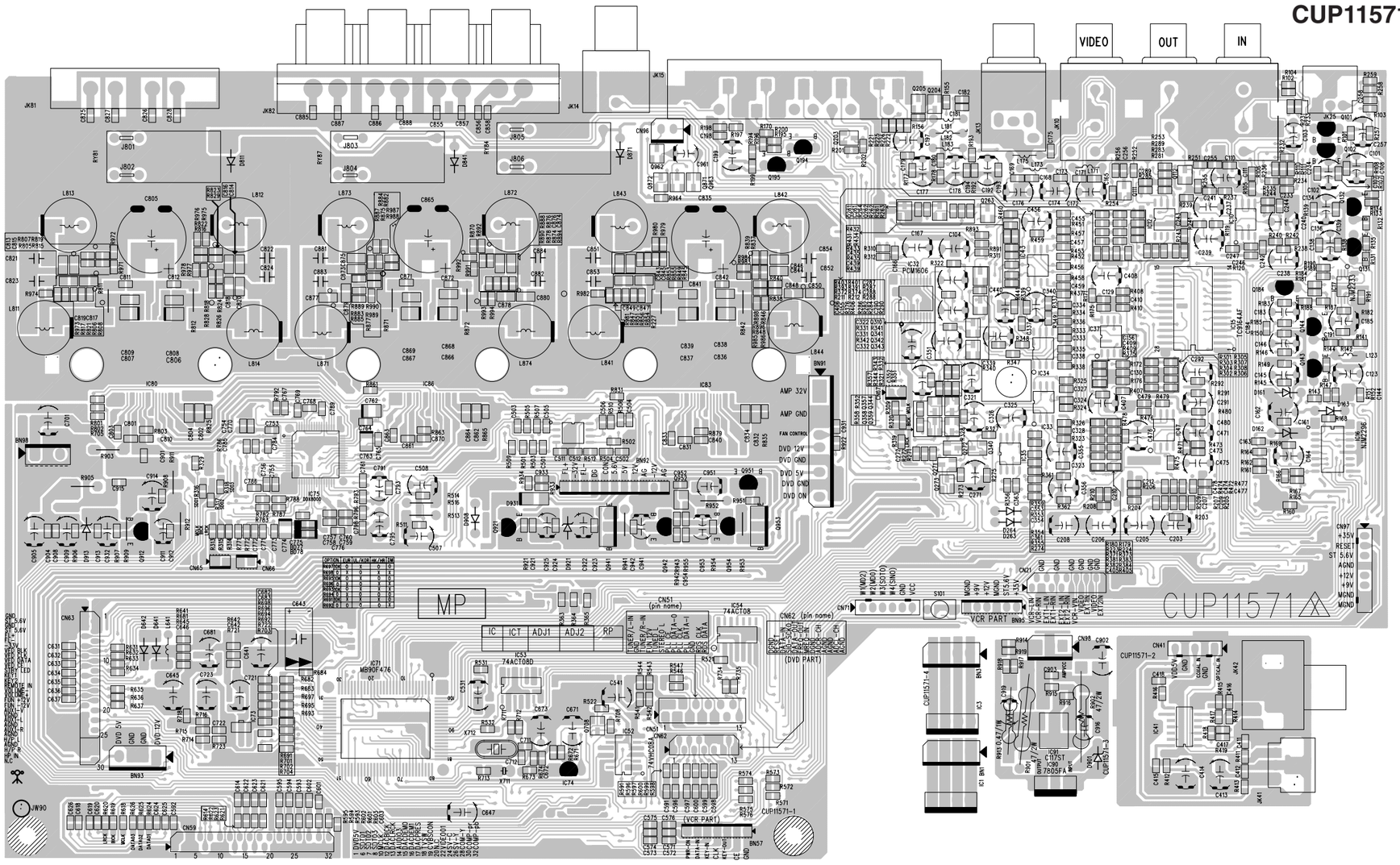

MAIN BOARD

CUP11571Z

BOTTOM VIEW

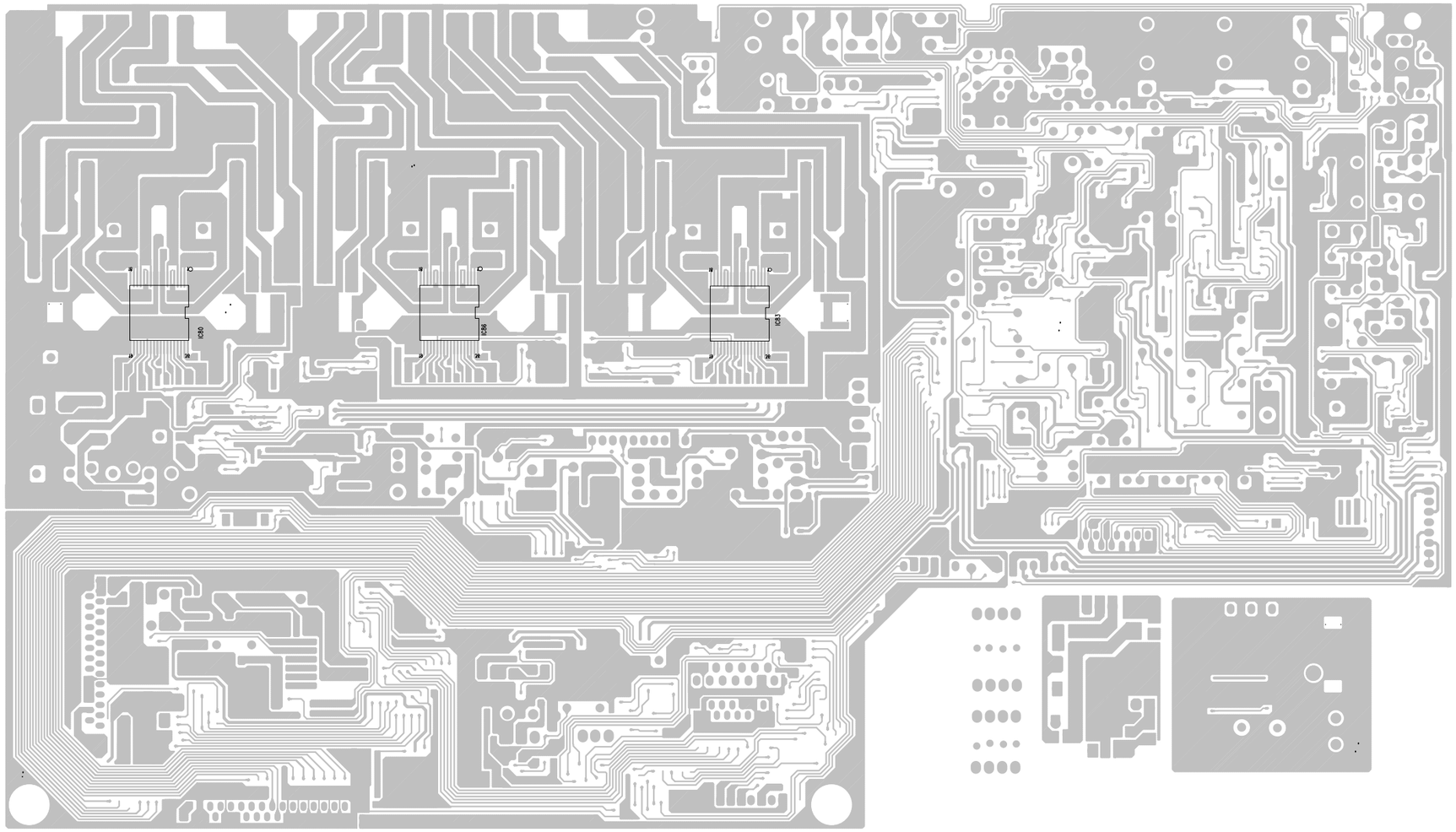

MPEG BOARD

TOP VIEW

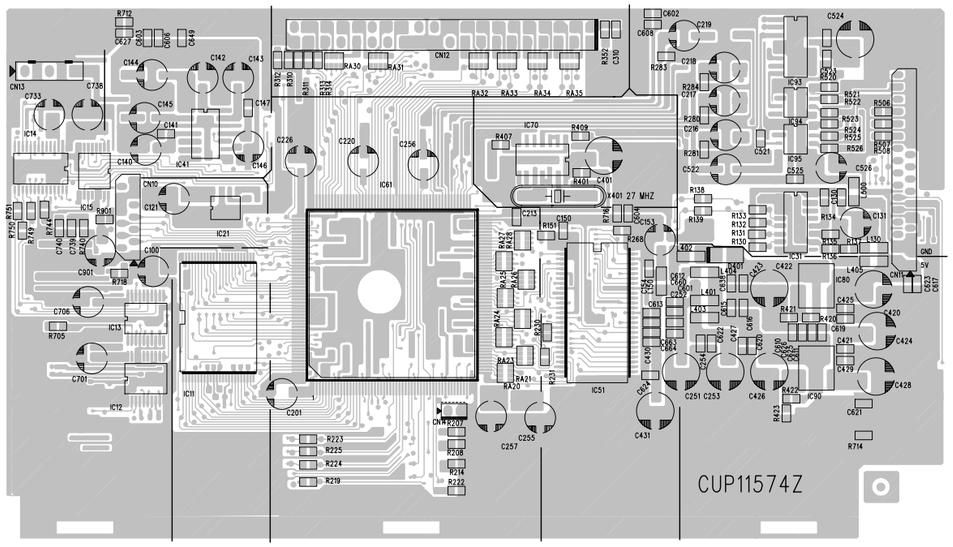

CUP11574Z

BOTTOM VIEW

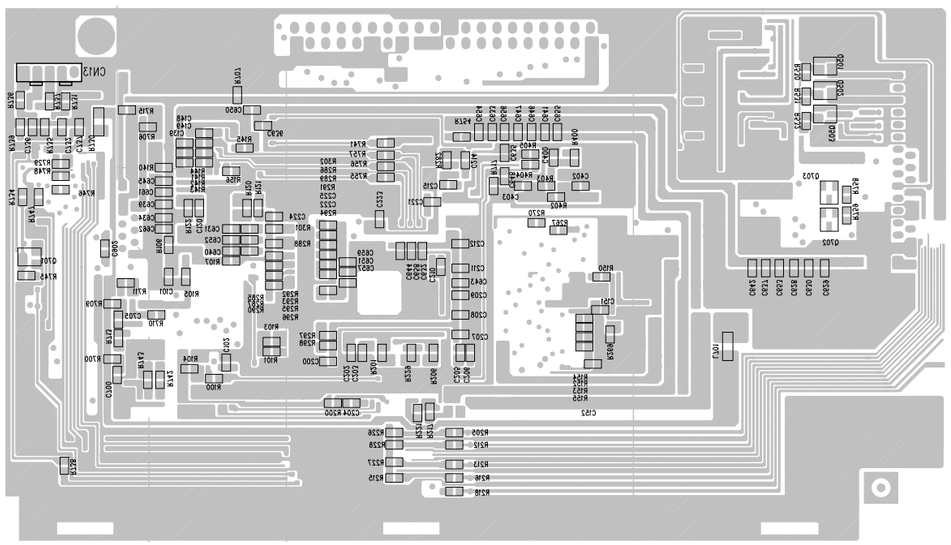

VCR MAIN BOARD

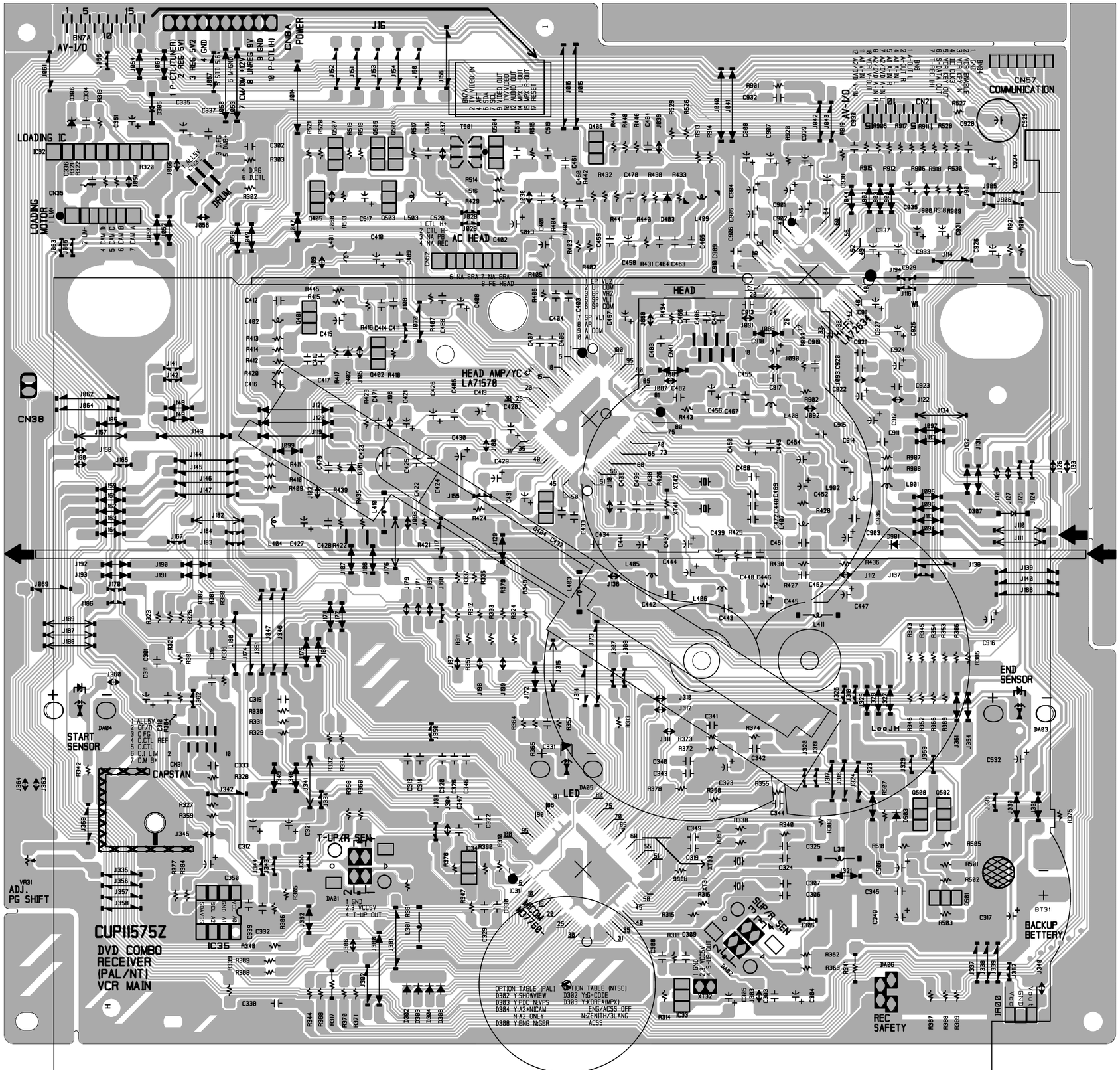

VCR TUNER BOARD

CUP11576Z

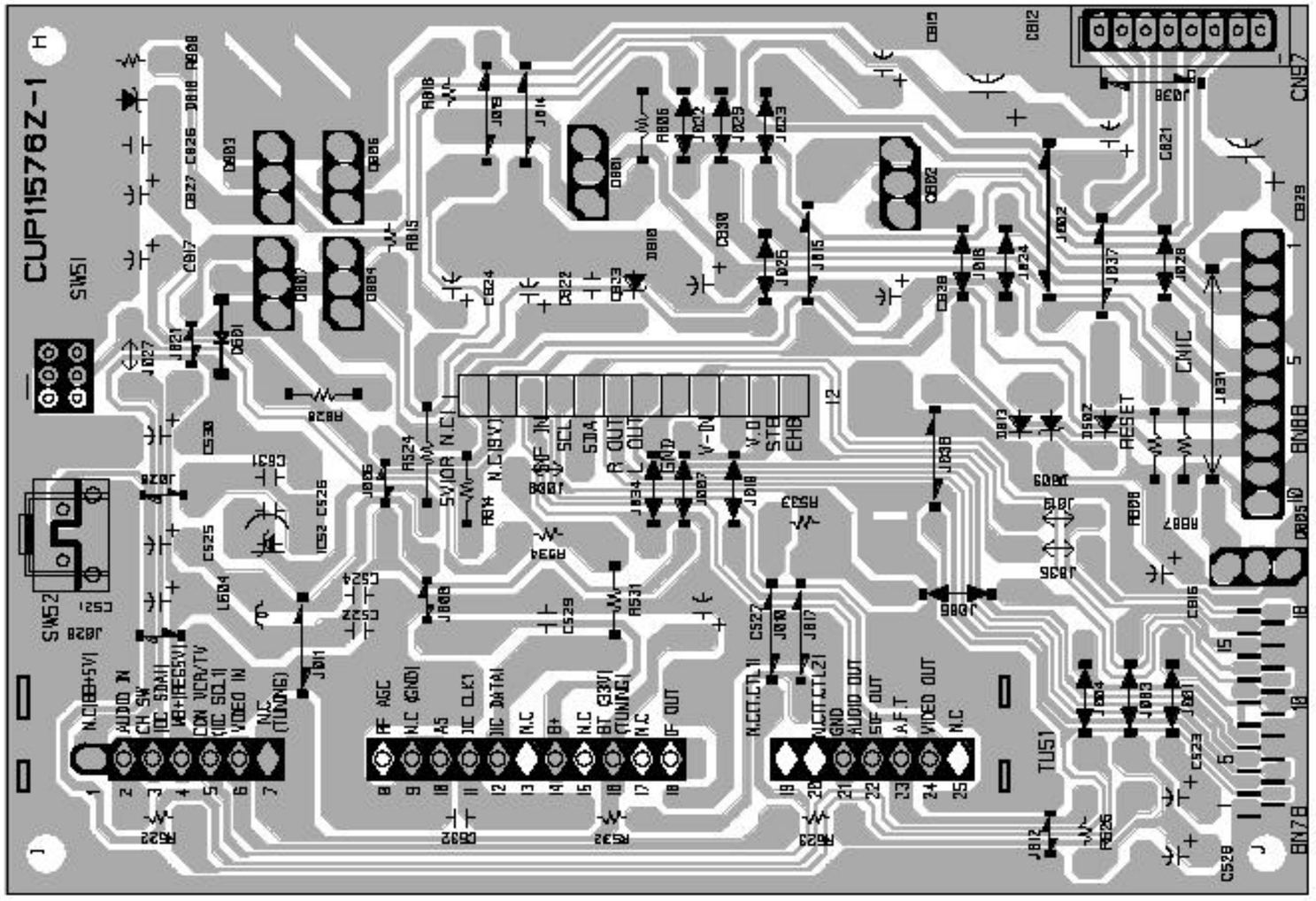

VCR MPX BOARD

CUP11577Z

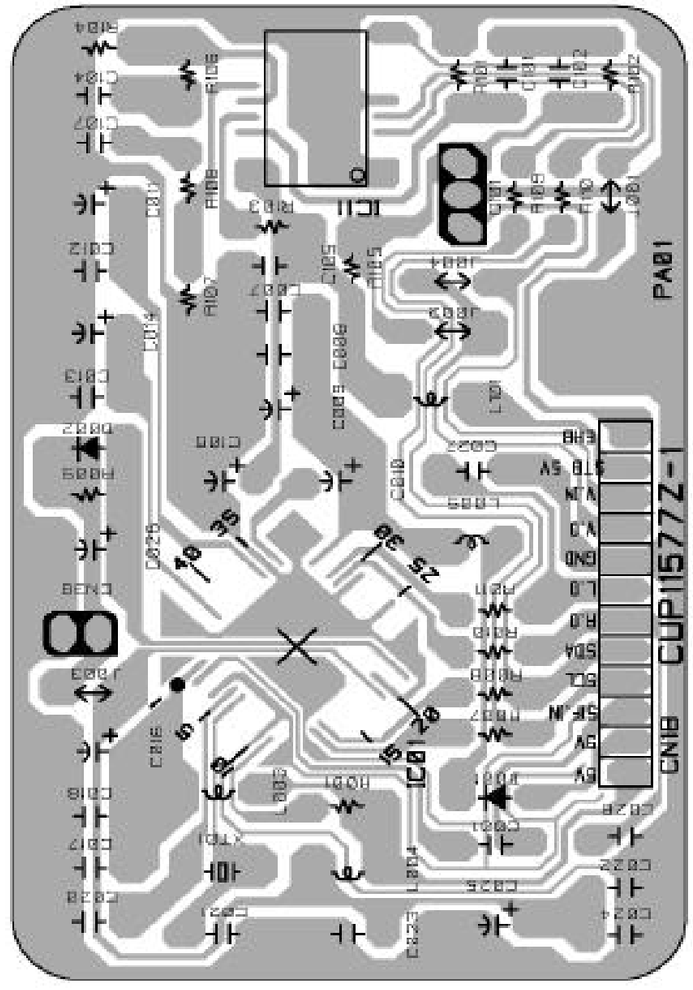

WIRING DIAGRAM

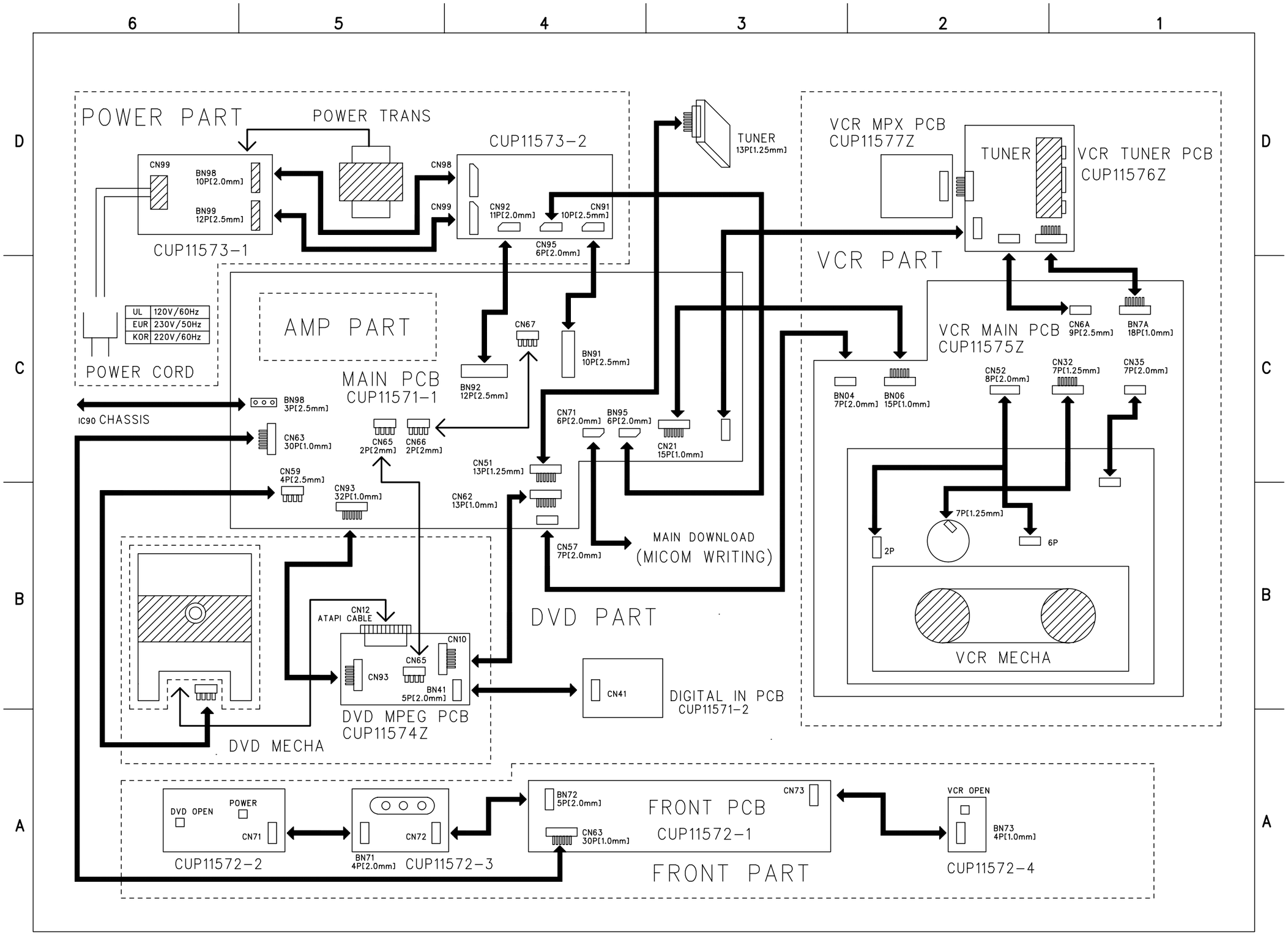

EXPLODED VIEW

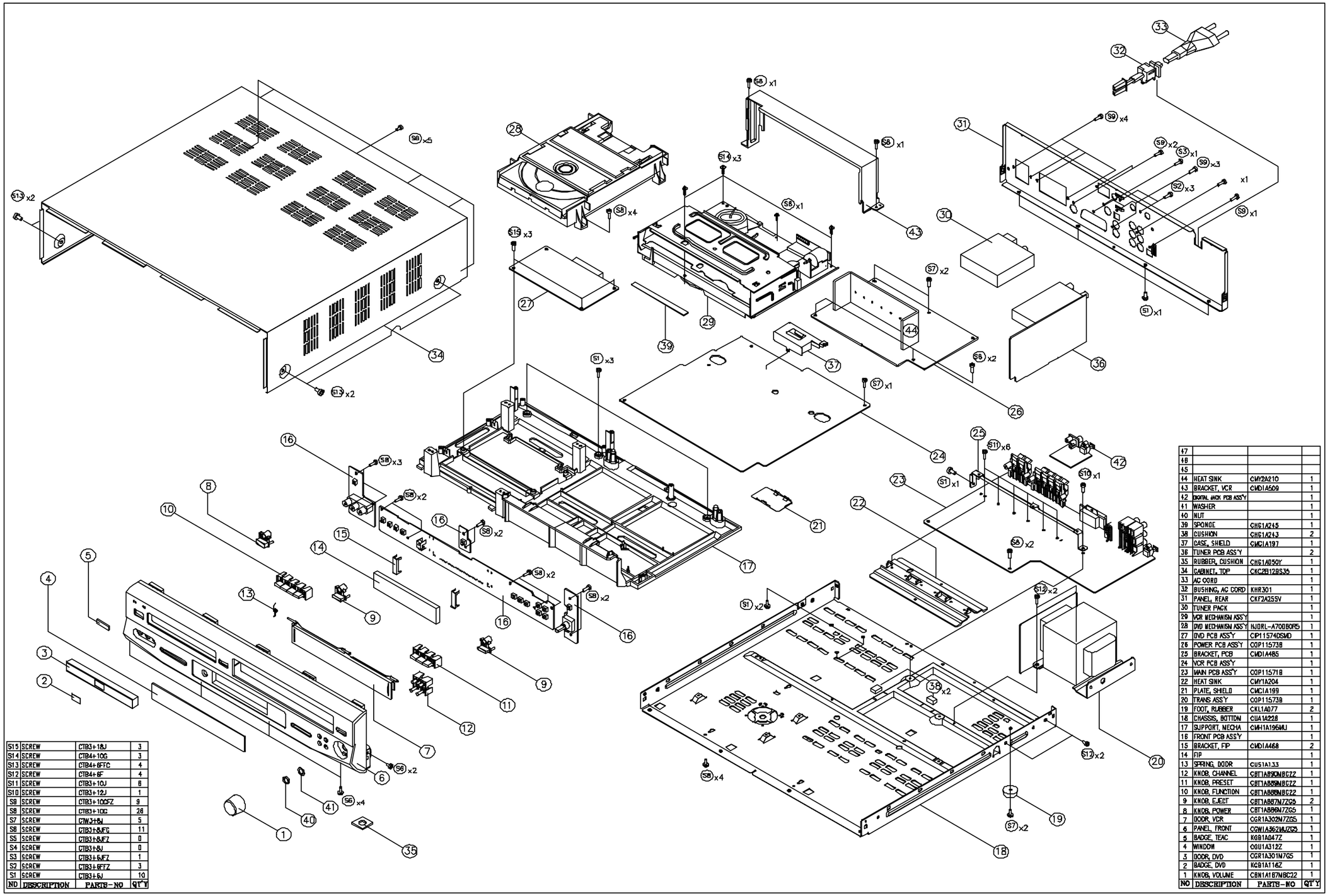

S15	SCREW	CTB3+18J	3
S14	SCREW	CTB4+10G	3
S13	SCREW	CTB4+6FTC	4
S12	SCREW	CTB4+8F	4
S11	SCREW	CTB3+10J	6
S10	SCREW	CTB3+12J	1
S9	SCREW	CTB3+10GFZ	9
S8	SCREW	CTB3+10G	26
S7	SCREW	CTW3+6J	5
S6	SCREW	CTB3+8JFC	11
S5	SCREW	CTB3+8JFZ	0
S4	SCREW	CTB3+8J	0
S3	SCREW	CTB3+6JFZ	1
S2	SCREW	CTB3+6FTZ	3
S1	SCREW	CTB3+6J	10
NO	DESCRIPTION	PARTS-NO	QTY

47			
46			
45			
44	HEAT SINK	CMY2A210	1
43	BRACKET, VCR	CMD1A509	1
42	DIGITAL MIX PCB ASS'Y		1
41	WASHER		1
40	NUT		1
39	SPONGE	CHG1A245	1
38	CUSHION	CHG1A243	2
37	CASE, SHIELD	CMC1A197	1
36	TUNER PCB ASS'Y		2
35	RUBBER, CUSHION	CHG1A050Y	1
34	CABINET, TOP	CKC2B12B535	1
33	AC CORD		1
32	BUSHING, AC CORD	KHR301	1
31	PANEL, REAR	CKF2A255V	1
30	TUNER PACK		1
29	VCR MECHANISM ASS'Y		1
28	DVD MECHANISM ASS'Y	NJDRL-A700B0F5	1
27	DVD PCB ASS'Y	CP11574DSMD	1
26	POWER PCB ASS'Y	CQP115738	1
25	BRACKET, PCB	CMD1A485	1
24	VCR PCB ASS'Y		1
23	MAIN PCB ASS'Y	CQP115718	1
22	HEAT SINK	CMY1A204	1
21	PLATE, SHIELD	CMC1A199	1
20	TRANS ASS'Y	CQP115738	1
19	FOOT, RUBBER	CKL1A077	2
18	CHASSIS, BOTTOM	CUA1A228	1
17	SUPPORT, MECHA	CMH1A196MU	1
16	FRONT PCB ASS'Y		1
15	BRACKET, FIP	CMD1A468	2
14	FIP		1
13	SPRING, DOOR	CUS1A133	1
12	KNOB, CHANNEL	CBT1AB9GNBCZ2	1
11	KNOB, PRESET	CBT1AB8GNBCZ2	1
10	KNOB, FUNCTION	CBT1AB8SNBCZ2	1
9	KNOB, EJECT	CBT1AB87N7ZG5	2
8	KNOB, POWER	CBT1AB86N7ZG5	1
7	DOOR, VCR	CGR1A302N7ZG5	1
6	PANEL, FRONT	CGW1A362MUZG5	1
5	BADGE, TEAC	KGB1A047Z	1
4	WINDOW	CGU1A312Z	1
3	DOOR, DVD	CGR1A301N7G5	1
2	BADGE, DVD	KGB1A116Z	1
1	KNOB, VOLUME	CBN1A187NBC22	1
NO	DESCRIPTION	PARTS-NO	QTY

A700-60R5 (DVD MECHANISM) EXPLODED VIEW 1

MARK	DATE	SIGN	MARK	REVISION ITEAM	REVISION REASON	APPROVE

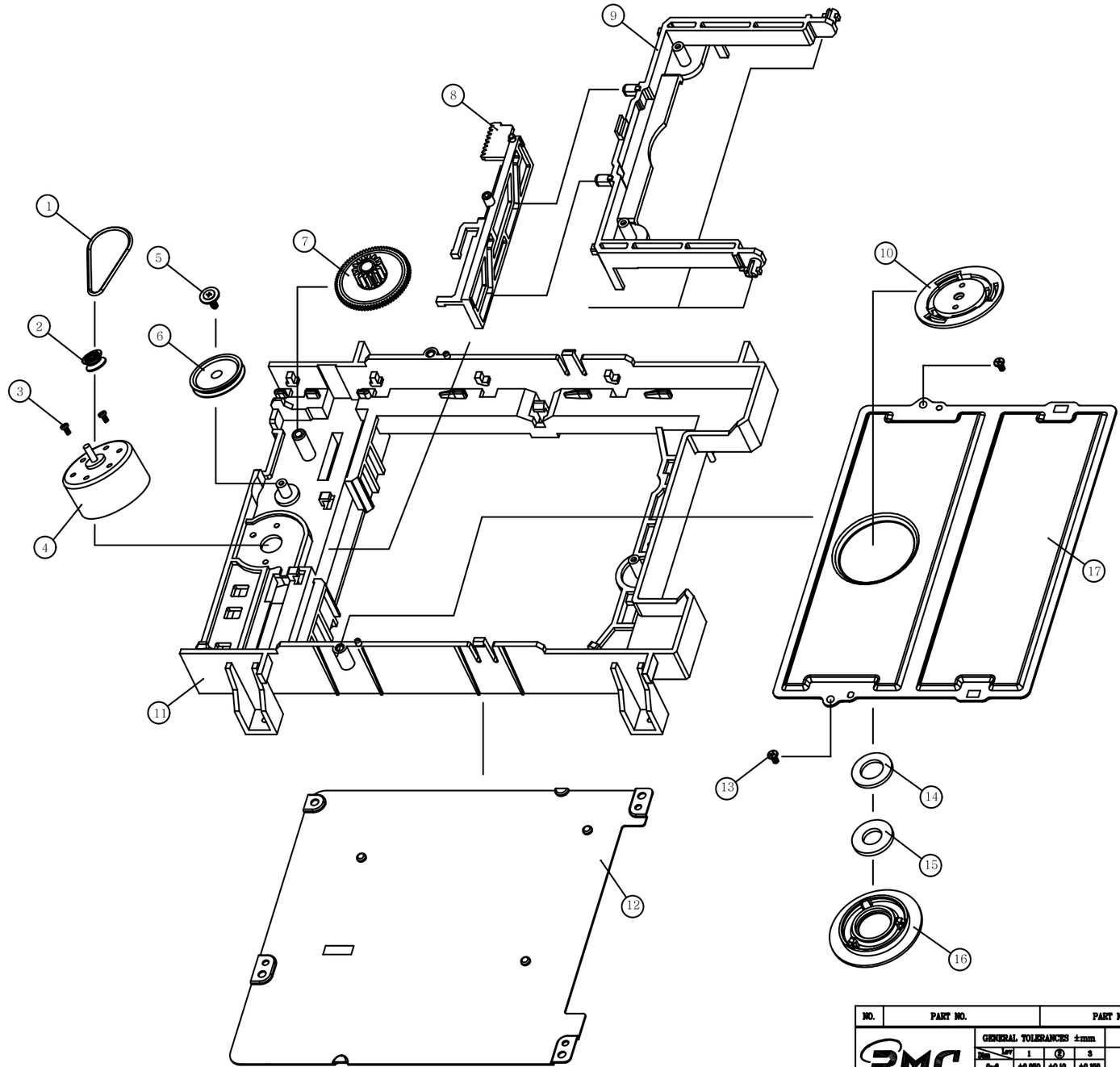

NO.	PART NAME	REMARKS
1	BELT	1
2	PULLY,MOTOR	1
3	SCREW,MC(L/MOTOR)	2
4	MOTOR,GEAR	1
5	SCREW,TAP(GEAR,PULLY)	1
6	GEAR,PULLY	1
7	PINION,LOADING	1
8	SLIDE,CAM	1
9	LEVER,CAM	1
10	CLAMP,TOP	1
11	BASE,LOADING	1
12	COVER,BTM	1
13	SCREW,TAP(COVER,TOP)	2
14	PLATE,CLAMP	1
15	MAGNET	1
16	CLAMP,BTM	1
17	COVER,TOP	1

NOTES

1. MOTOR,GEAR SCREW 조립용 전동 DRIVER TORQUE 1.0±0.1 kgf.cm
2. GEAR,PULLY SCREW 조립용 전동 DRIVER TORQUE 0.6±0.1 kgf.cm
3. COVER,TOP SCREW는 DECK ASSY시 체결하지 않으며 P/U SHORT를 제거 후 체결할 것.

NO.	PART NO.	PART NAME	MATERIAL	COLOR/FINISH	Q'TY	REMARKS

Raymedia Co.,Ltd.

GENERAL TOLERANCES ±mm			
Dim / Lev	1	2	3
0~6	±0.050	±0.10	±0.150
6~15	±0.10	±0.150	±0.20
15~30	±0.10	±0.150	±0.250
30~80	±0.150	±0.20	±0.30
80~150	±0.20	±0.250	±0.350
150~220	±0.20	±0.30	±0.40
220~350	±0.30	±0.40	±0.50

PLANNED	CHECKED	APPROVED
UNIT : mm	ANGLE : 3rd	REV 1.0

NAME	AY LOADING 분해도	SCALE : N/S
DWG NO.		SIZE : A3
MODEL	RL-A700(60R5,60S5)	SHEET NO. : 1/1

REF NO.

A700-60R5 (DVD MECHANISM) EXPLODED VIEW 2

REVISED	DATE	SIGN	MARK	REVISION ITEAM	REVISION REASON	APPROVE
			△			

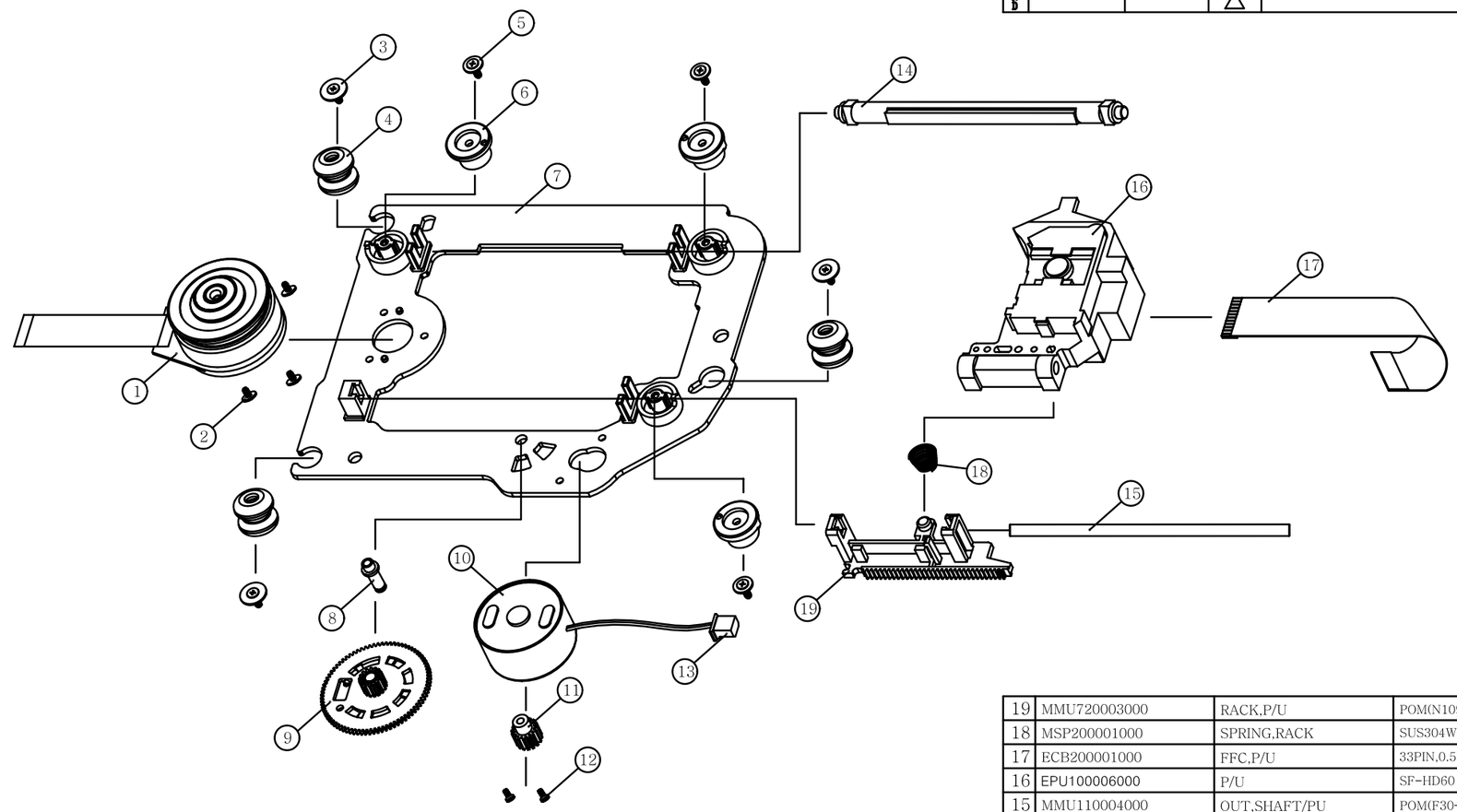

NOTES

1. SPINDLE MOTOR SCREW 조립용 전동 DRIVER TORQUE
   2.3±0.1 kgf.cm
2. DAMPER SCREW 조립용 전동 DRIVER TORQUE
   1.3±0.3 kgf.cm
3. MOTOR,GEAR SCREW 조립용 전동 DRIVER TORQUE
   1.1±0.1 kgf.cm
4. CAP,G/S SCREW 조립용 전동 DRIVER TORQUE
   1.30±0.1 kgf.cm

NO.	PART NO.	PART NAME	MATERIAL	COLOR/FINISH	Q'TY	REMARKS
19	MMU720003000	RACK,P/U	POM(N109-LD),BLK		1	
18	MSP200001000	SPRING,RACK	SUS304WPB,ø0.30,60g		1	
17	ECB200001000	FFC,P/U	33PIN,0.5PITCH,L80		1	
16	EPU100006000	P/U	SF-HD60		1	
15	MMU110004000	OUT,SHAFT/PU	POM(F30-02),BLK		1	
14	MMC210001000	SHAFT,P/U	SUS420J2,ø3.0X83.0		1	
13	ECN100000000	CONN,F/MOTOR	CONN(2PIN)+ TER		1	
12	MSC100000000	SCREW,MC(F/MOTOR)	M1PA+ 1.7X3.0X3.0 BLK		2	
11	MMU710002000	GEAR,F/MOTOR	POM(HI-525),WHT		1	
10	EMT200000000	MOTOR,GEAR			1	
9	MMU710003000	PINION,FEEDING	POM(HI-525),WHT		1	
8	MMC210000000	SHAFT,F/GEAR	BSBM		1	
7	MMU110001000	OUT,B/FEEDING	POM(F30-02),BLK		1	
6	MMU250000000	CAP,G/S	POM(F30-02),BLK		3	
5	MSC200002000	SCREW,TAP(CAP,G/S)	T2WS+ 1.7X5.0X5.3 MSNZ		3	
4	MRU110000000	DAMPER	IIR,HS35°		3	
3	MSC200000000	SCREW,TAP(DAMPER)	T2WS+ 1.7X5.0X8.0 MSNZ		3	
2	MSC100001000	SCREW,MC(S/MOTOR)	M1WT+ 1.7X3.0X4.5 MSNZ		3	
1	MAY001006000 MAY001019000	AY S/MOTOR			1	삼홍사,마츠시다 고모시스

RMC
Raymedia Co.,Ltd.

REF NO.

GENERAL TOLERANCES ±mm			
Dim \ Lev	1	②	3
0~6	±0.050	±0.10	±0.150
6~18	±0.10	±0.150	±0.20
18~30	±0.10	±0.150	±0.250
30~80	±0.150	±0.20	±0.30
80~150	±0.20	±0.250	±0.350
150~210	±0.20	±0.30	±0.40
210~250	±0.20	±0.40	±0.50

PLANNED	CHECKED	APPROVED
UNIT : mm	ANGLE : 3rd	REV 1.0

NAME	AY FEEDING 분해도	SCALE :	N/S
DWG NO.		SIZE :	A3
MODEL	RL-A700(60R5,60S5)	SHEET NO. :	1/1

K-30 (VCR MECHANISM) ASSEMBLING DIAGRAM

A. TOP VIEW

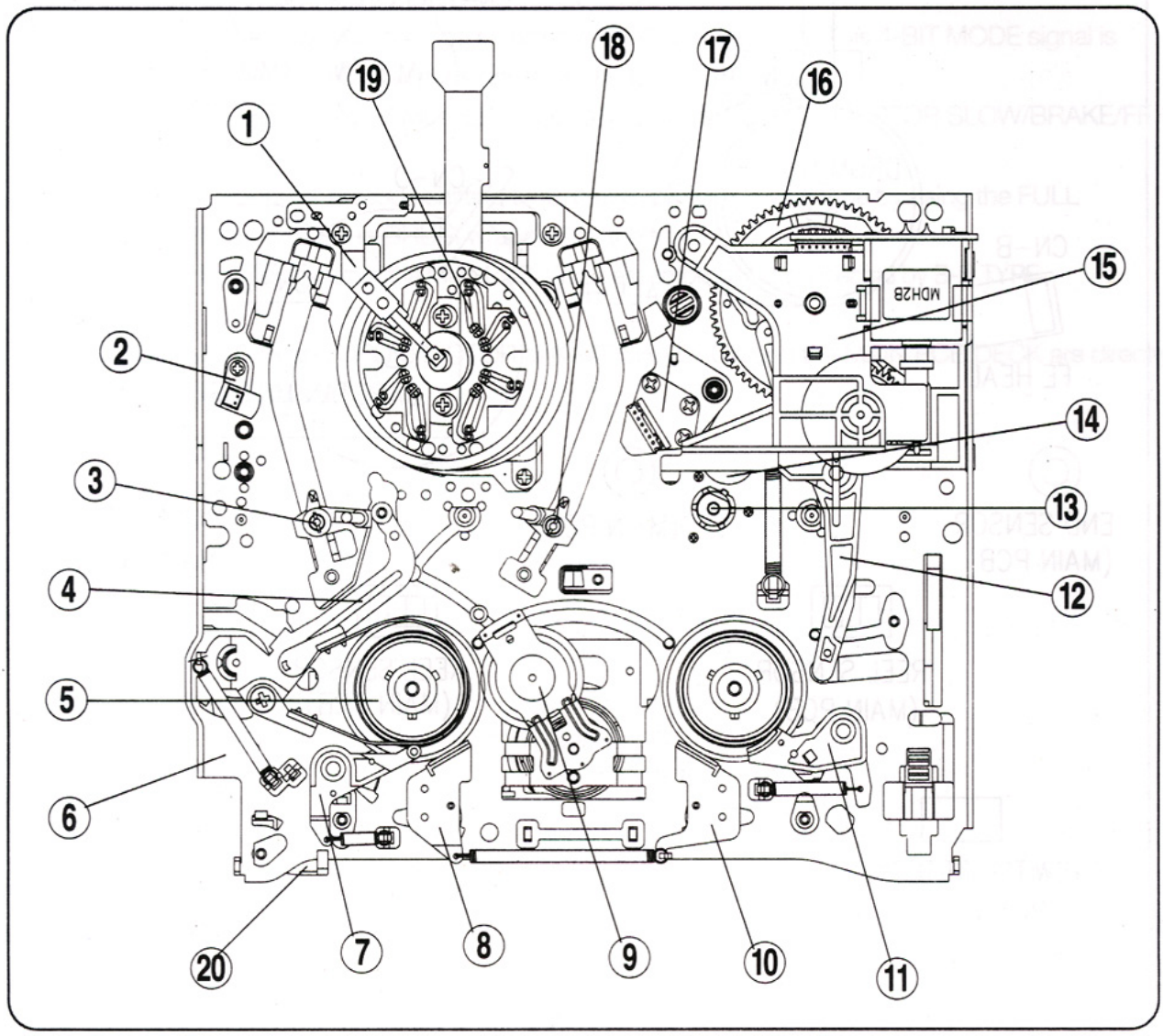

1. EARTH BRKT ASS'Y
2. FE HEAD
3. S SLANT POLE ASS'Y
4. TENSION BEND ASS'Y
5. REEL TABLE
6. MAIN BASE ASS'Y
7. S SUB BRAKE ASS'Y
8. S MAIN BRAKE ASS'Y
9. IDLER PLATE TOTAL ASS'Y
10. T MAIN BRAKE ASS'Y
11. T-SUB BRAKE ASS'Y
12. RELAY LEVERL
13. CAPSTAN MOTOR
14. PINCH LEVEL TOTAL ASS'Y
15. L/C BRKT TOTAL ASS'Y
16. CAM GEAR
17. AC HEAD TOTAL ASS'Y
18. T SLANT POLE ASS'Y
19. DRUM TOTAL ASS'Y
20. RECORD SAFETY LEVEL

B. BOTTOM VIEW

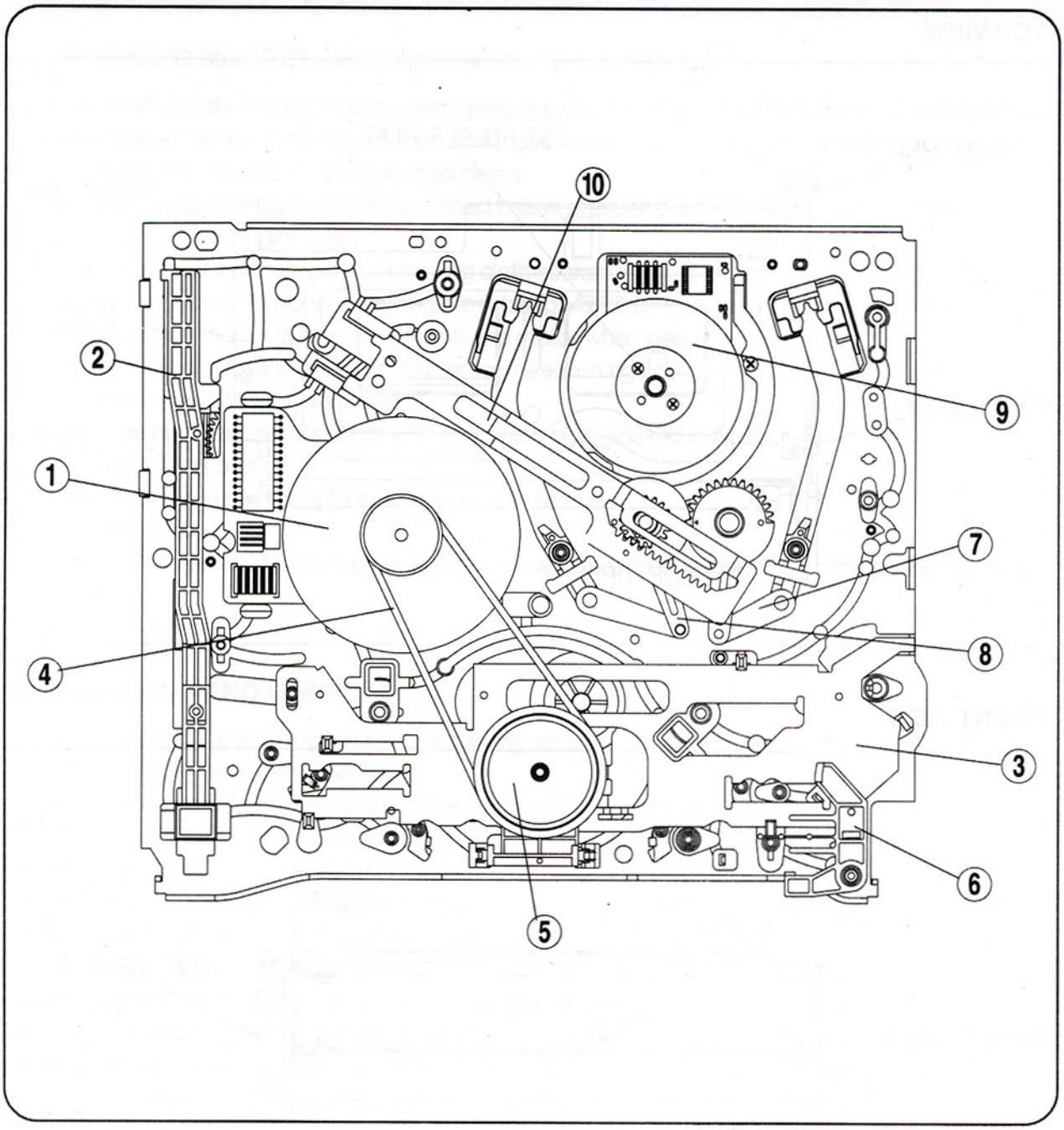

1. CAPSTAN MOTOR
2. F/L RACK
3. CONNECT PLATE
4. REEL BELT
5. REEL GEAR TOTAL ASS'Y
6. RECPRD SAFETY LEVER
7. L LOADING ASS'Y
8. R LOADING ASS'Y
9. DRUM TOTAL ASS'Y
10. LOADING RACK ASS'Y

K-30 (VCR MECHANISM) EXPLODED VIEW

A. TOP VIEW

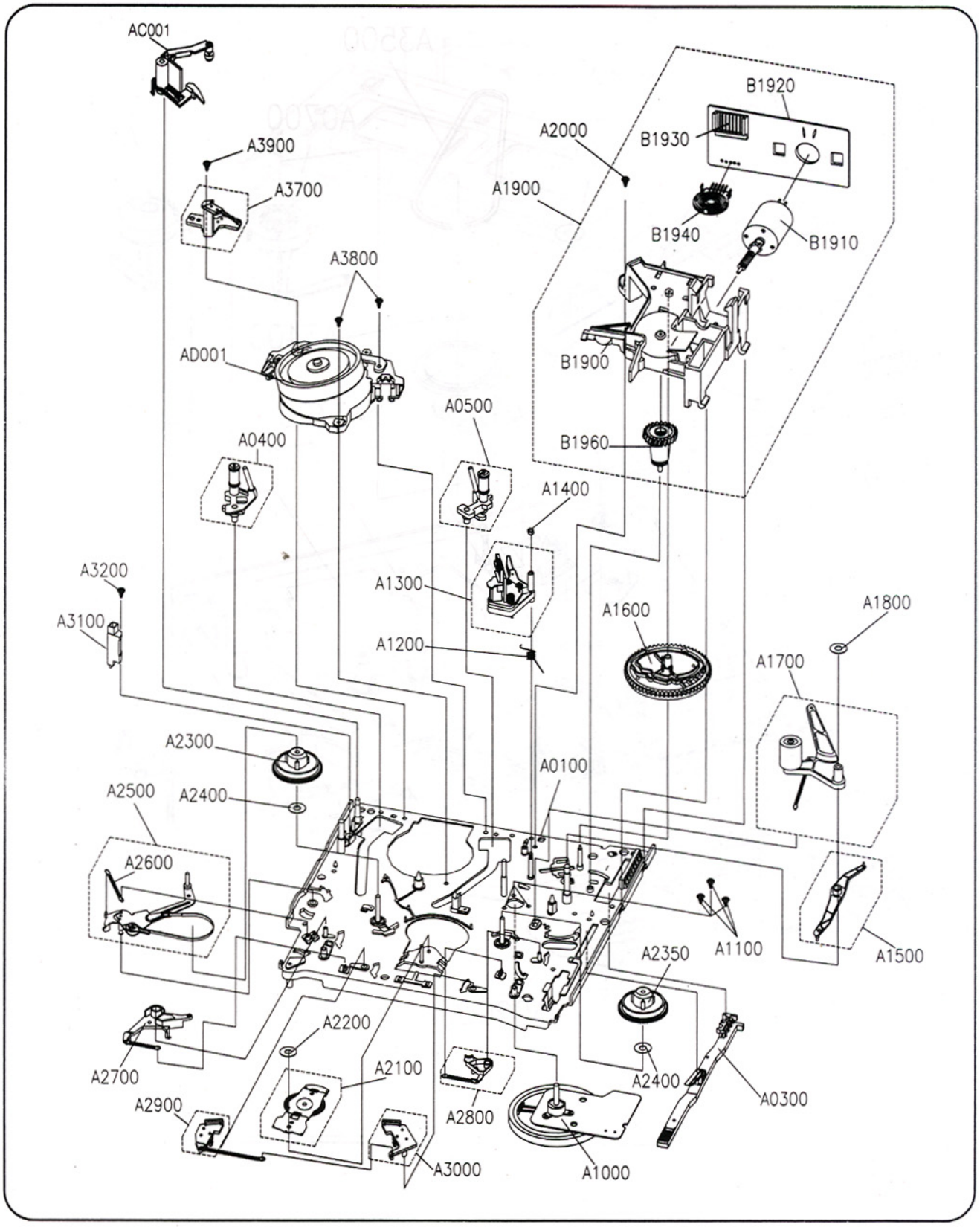

B. BOTTOM VIEW

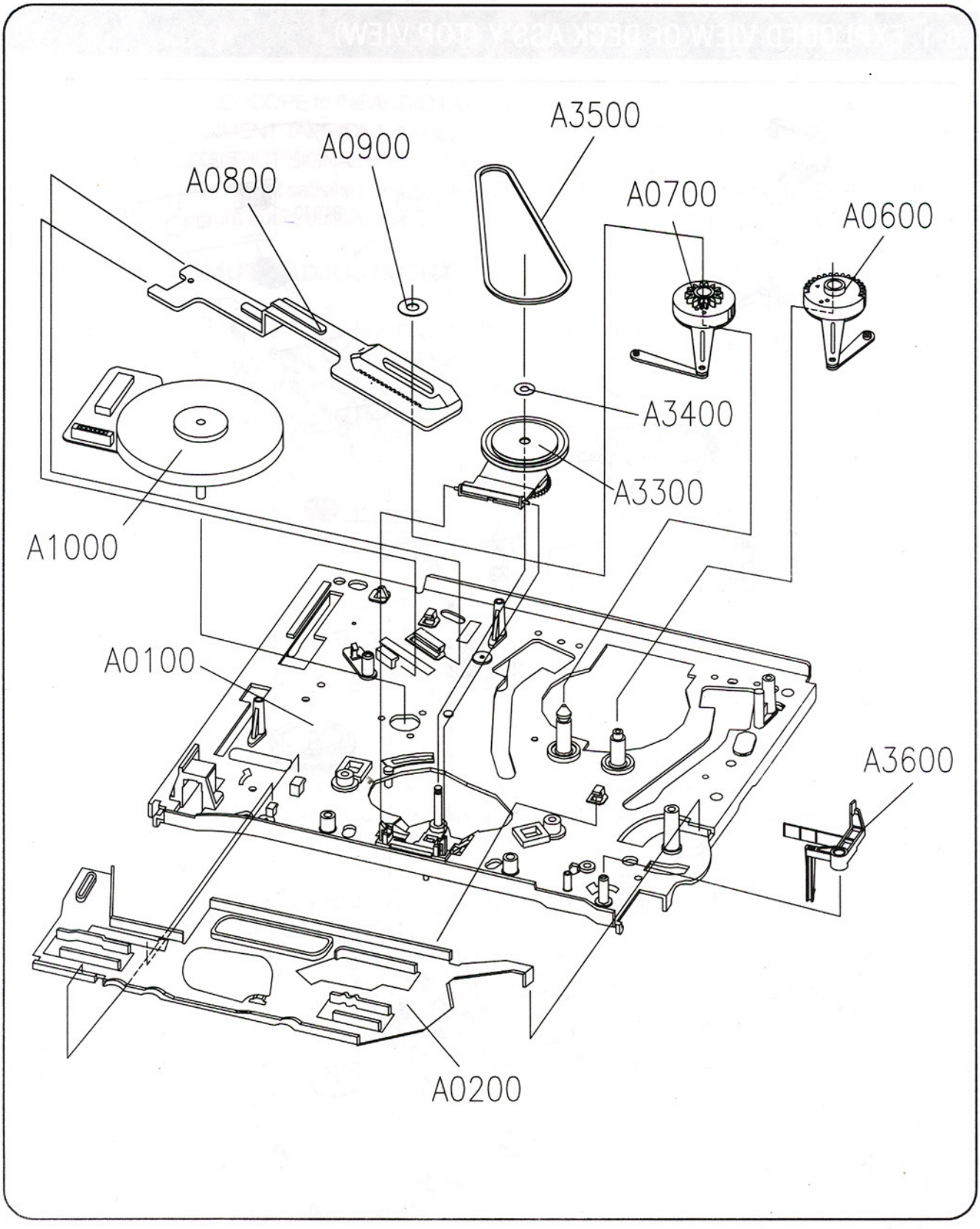

K-30 (VCR MECHANISM) EXPLODED VIEW OF P/L ASS'Y

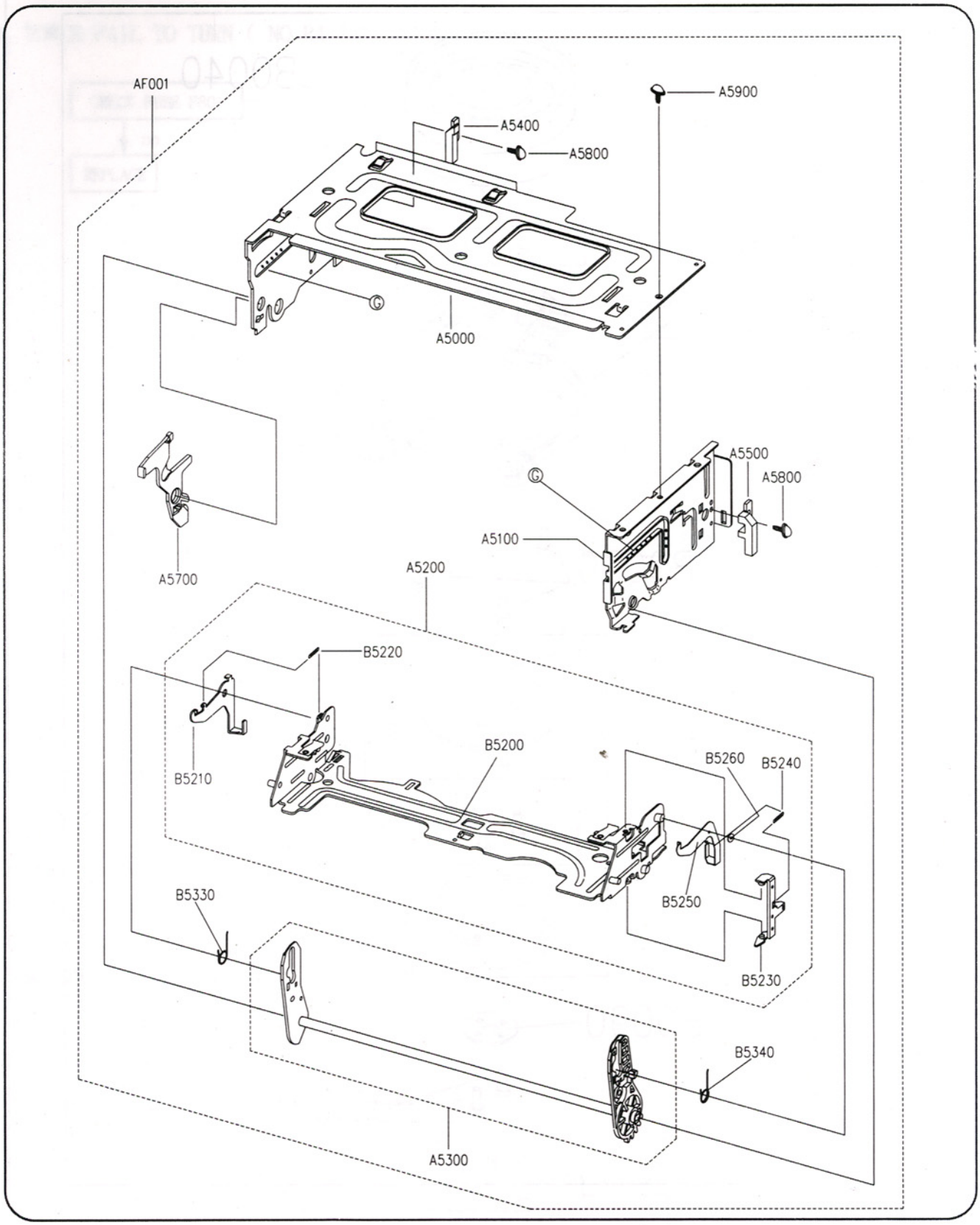

■ RESISTORS AND CAPACITORS

Notes.
*** Circuit No's first character indicates kinds of part type.**
C : Capacitors
R : Resistors
D : Diode
J : Jumper
L : Coil
Q : Transistors
S : Switch
BK : Bracket
JK : Jack
IC : Integrated Circuit
X : Crystal
BD : Bead

■ IMPORTANT SAFETY NOTICE

* Components identified by ! Mark have special characteristics important for safety.
* When replacing any of these components, use only manufacture's specified parts.
* The unit of resistance is OHM (Ω)
  K=1000(Ω), M=1000(KΩ)
* The unit of capacitance is MICROFARAD (uF)
  P=10^{-6} uF

■ Numbering System of Resistor Example

CRD 25 F J 101
Type Wattage Shape Tolerance Value

Resistor Type	Wattage	Tolerance
K(C/H)RD : Carbon	20 : 1/5W	F : 1%
K(C/H)RG : Metal Oxide	25 : 1/4W	J : 5%
	50 : 1/2W	K : 10%
	1 : 1W	
K(C/H)RG : Metal Cement	2 : 2W	
	3 : 3W	
K(H)RJ : Carbon. CHIP	10 : 1/10W	
	14 : 1/4W	

■ Numbering System of Capacitor Example

HCKR 1H 101 K B
Type Voltage Value Tolerance Pecularity

Capacitor Type	Voltage		Tolerance
	HCEA Type	Other	
HCB : Ceramic	0J : 6.3V	1H :50V DC	C : 0.25pF
CCC : Ceramic	1A : 10V	1 : 125V DC	G : 2%
CCK : Ceramic	1C: 16V	KC : 400V AC	J : 5%
HCQI : Polyester	1E : 25V		K : 10%
HCQP : Polypropyene	1H : 50V		Z : +80%, -20%
HCQS : Polystyrol	1V : 35V		
HCUS : Ceramic			
HCEA : ELECT			
HCEA : ELECT.CHIP			

ELECTRICAL PARTS LIST

■ DVD PART

SEQ.	PART NO.	DESCRIPTION	SPECIFICATION	REMARKS
	COP11572B	**FRONT PCB ASS'Y**	ADV R-7100	
	CIP11572B	**FRONT PCB AUTO ASS'Y**	ADV R-7100	
	CUP11572Z	**PCB , FRONT**	ADV R-7100	
C701	HCBS1H103ZFT	CAP , CERAMIC	0.01UF 50V Z	
C702	HCBS1H103ZFT	CAP , CERAMIC	0.01UF 50V Z	
C703	HCBS1H103ZFT	CAP , CERAMIC	0.01UF 50V Z	
C704	HCBS1H103ZFT	CAP , CERAMIC	0.01UF 50V Z	
C711	HCBS1H103ZFT	CAP , CERAMIC	0.01UF 50V Z	
C712	HCBS1H103ZFT	CAP , CERAMIC	0.01UF 50V Z	
C713	HCBS1H220JT	CAP , CERAMIC	22UF 50V J	
C714	HCEA1CKS470T	CAP , ELECT	47UF 16V	
C715	HCBS1H103ZFT	CAP , CERAMIC	0.01UF 50V Z	
C718	HCBS1H103ZFT	CAP , CERAMIC	0.01UF 50V Z	
C721	HCBS1H221KBT	CAP , CERAMIC	220PF 50V K	
C722	HCBS1H103ZFT	CAP , CERAMIC	0.01UF 50V Z	
C723	HCBS1H103ZFT	CAP , CERAMIC	0.01UF 50V Z	
C724	HCBS1H103ZFT	CAP , CERAMIC	0.01UF 50V Z	
C731	HCBS1H221KBT	CAP , CERAMIC	220PF 50V K	
C732	HCBS1H103ZFT	CAP , CERAMIC	0.01UF 50V Z	
C741	HCBS1H103ZFT	CAP , CERAMIC	0.01UF 50V Z	
C742	HCEA1HKS4R7T	CAP , ELECT	4.7UF 50V	
C743	HCBS1H220JT	CAP , CERAMIC	22UF 50V J	
C744	HCBS1H103ZFT	CAP , CERAMIC	0.01UF 50V Z	
C745	HCEA1CKS101T	CAP , ELECT	100UF 16V	
C752	HCBS1H103ZFT	CAP , CERAMIC	0.01UF 50V Z	
C763	HCBS1H103ZFT	CAP , CERAMIC	0.01UF 50V Z	
C764	HCBS1H103ZFT	CAP , CERAMIC	0.01UF 50V Z	
C765	HCBS1H101KBT	CAP , CERAMIC	100PF 50V K	
C766	HCBS1H101KBT	CAP , CERAMIC	100PF 50V K	
C771	HCBS1H101KBT	CAP , CERAMIC	100PF 50V K	
C772	HCBS1H101KBT	CAP , CERAMIC	100PF 50V K	
C773	HCBS1H181KBT	CAP , CERAMIC	180PF 50V K	
C776	HCEA1CKS101T	CAP , ELECT	100UF 16V	
D701	HVD1SS133MT	DIODE	1SS133T-77	
D702	HVD1SS133MT	DIODE	1SS133T-77	
D721	HVD1SS133MT	DIODE	1SS133T-77	
D722	HVD1SS133MT	DIODE	1SS133T-77	
D723	HVD1SS133MT	DIODE	1SS133T-77	
D724	HVD1SS133MT	DIODE	1SS133T-77	
D731	HVD1SS133MT	DIODE	1SS133T-77	
D752	HVD1SS133MT	DIODE	1SS133T-77	
J701	C3A206	WIRE , COPPER	SN95/PB5,0.6	
J702	C3A206	WIRE , COPPER	SN95/PB5,0.6	
J703	C3A206	WIRE , COPPER	SN95/PB5,0.6	
J704	C3A206	WIRE , COPPER	SN95/PB5,0.6	
J705	C3A206	WIRE , COPPER	SN95/PB5,0.6	
J706	C3A206	WIRE , COPPER	SN95/PB5,0.6	
J707	C3A206	WIRE , COPPER	SN95/PB5,0.6	

SEQ.	PART NO.	DESCRIPTION	SPECIFICATION	REMARKS
J708	C3A206	WIRE , COPPER	SN95/PB5,0.6	
J709	C3A206	WIRE , COPPER	SN95/PB5,0.6	
J710	C3A206	WIRE , COPPER	SN95/PB5,0.6	
J711	C3A206	WIRE , COPPER	SN95/PB5,0.6	
J721	C3A206	WIRE , COPPER	SN95/PB5,0.6	
J722	C3A206	WIRE , COPPER	SN95/PB5,0.6	
J723	C3A206	WIRE , COPPER	SN95/PB5,0.6	
J724	C3A206	WIRE , COPPER	SN95/PB5,0.6	
J741	C3A206	WIRE , COPPER	SN95/PB5,0.6	
J742	C3A206	WIRE , COPPER	SN95/PB5,0.6	
J743	C3A206	WIRE , COPPER	SN95/PB5,0.6	
J744	C3A206	WIRE , COPPER	SN95/PB5,0.6	
J745	C3A206	WIRE , COPPER	SN95/PB5,0.6	
J746	C3A206	WIRE , COPPER	SN95/PB5,0.6	
J747	C3A206	WIRE , COPPER	SN95/PB5,0.6	
J748	C3A206	WIRE , COPPER	SN95/PB5,0.6	
J749	C3A206	WIRE , COPPER	SN95/PB5,0.6	
J750	C3A206	WIRE , COPPER	SN95/PB5,0.6	
J761	C3A206	WIRE , COPPER	SN95/PB5,0.6	
J762	C3A206	WIRE , COPPER	SN95/PB5,0.6	
J763	C3A206	WIRE , COPPER	SN95/PB5,0.6	
J781	C3A206	WIRE , COPPER	SN95/PB5,0.6	
L701	HLQ02C100KT	COIL , AXAIL	10UHK	
Q711	HVTKRC107MT	T.R	KRC107M	
R711	CRD20TJ331T	RES , CARBON	330OHM 1/5W J	
R712	CRD20TJ102T	RES , CARBON	1KOHM 1/5W J	
R713	CRD20TJ102T	RES , CARBON	1KOHM 1/5W J	
R714	C3A206	WIRE , COPPER	SN95/PB5,0.6	
R716	CRD20TJ333T	RES , CARBON	33KOHM 1/5W J	
R717	CRD20TJ100T	RES , CARBON	10OHM 1/5W J	
R718	CRD20TJ100T	RES , CARBON	10OHM 1/5W J	
R721	CRD20TJ102T	RES , CARBON	1KOHM 1/5W J	
R722	CRD20TJ152T	RES , CARBON	1.5KOHM 1/5W J	
R723	CRD20TJ182T	RES , CARBON	1.8KOHM 1/5W J	
R724	CRD20TJ272T	RES , CARBON	2.7KOHM 1/5W J	
R725	CRD20TJ332T	RES , CARBON	3.3KOHM 1/5W J	
R731	CRD20TJ102T	RES , CARBON	1KOHM 1/5W J	
R732	CRD20TJ152T	RES , CARBON	1.5KOHM 1/5W J	
R733	CRD20TJ182T	RES , CARBON	1.8KOHM 1/5W J	
R734	CRD20TJ272T	RES , CARBON	2.7KOHM 1/5W J	
R735	CRD20TJ332T	RES , CARBON	3.3KOHM 1/5W J	
R736	CRD20TJ562T	RES , CARBON	5.6KOHM 1/5W J	
R737	CRD20TJ752T	RES , CARBON	7.5KOHM 1/5W J	
R741	CRD20TJ562T	RES , CARBON	5.6KOHM 1/5W J	
R761	CRD20TJ221T	RES , CARBON	220OHM 1/5W J	
R762	CRD20TJ221T	RES , CARBON	220OHM 1/5W J	
R763	CRD20TJ101T	RES , CARBON	100OHM 1/5W J	
R764	CRD20TJ101T	RES , CARBON	100OHM 1/5W J	
R772	CRD20TJ471T	RES , CARBON	470OHM 1/5W J	
R773	CRD20TJ471T	RES , CARBON	470OHM 1/5W J	

SEQ.	PART NO.	DESCRIPTION	SPECIFICATION	REMARKS
R774	CRD20TJ104T	RES , CARBON	100KOHM 1/5W J	
R775	CRD20TJ104T	RES , CARBON	100KOHM 1/5W J	
R776	CRD20TJ2R2T	RES , CARBON	2.2OHM 1/5W J	
R777	CRD20TJ820T	RES , CARBON	82OHM 1/5W J	
S721	HST1A016Z	SW , TACT	SKQNAED010	
S722	HST1A016Z	SW , TACT	SKQNAED010	
S723	HST1A016Z	SW , TACT	SKQNAED010	
S724	HST1A016Z	SW , TACT	SKQNAED010	
S725	HST1A016Z	SW , TACT	SKQNAED010	
S726	HST1A016Z	SW , TACT	SKQNAED010	
S731	HST1A016Z	SW , TACT	SKQNAED010	
S732	HST1A016Z	SW , TACT	SKQNAED010	
S733	HST1A016Z	SW , TACT	SKQNAED010	
S734	HST1A016Z	SW , TACT	SKQNAED010	
S735	HST1A016Z	SW , TACT	SKQNAED010	
S736	HST1A016Z	SW , TACT	SKQNAED010	
S737	HST1A016Z	SW , TACT	SKQNAED010	
S738	HST1A016Z	SW , TACT	SKQNAED010	
	CWC1B2A25A450B	CABLE , CARD		
BK01	CMC1A201	PLATE , EARTH		
BK02	CMC1A201	PLATE , EARTH		
BK03	CMC1A201	PLATE , EARTH		
BK04	CMC1A201	PLATE , EARTH		
BK11	CMD1A468	BRACKET , FLT		
BK12	CMD1A468	BRACKET , FLT		
BN71	CWB1A910100NN	WIRE ASS'Y		
BN72	CWB1A904050NE	WIRE ASS'Y		
BN73	CWB1A903080NE	WIRE ASS'Y		
CN63	KJP25GA117ZG	WAFER , CARD CABLE	GF102-25S-TS	
CN71	KJP04GA19ZM	WAFER		
CN73	KJP03GA19ZM	WAFER		
D711	CVD30BSGATAAT	L.E.D , GREEN(TAPPING)		
FIP1	HFL11BT213GNK	F.I.P	ADV R-7100	
IC71	HRVKSM603TH2	SENSER , REMOCON	KSM-603TH2	
IC74	HVILC75725E	I.C , VFD DRIVER		
IC76	HVINJM2068MDTE1	I.C , OP AMP	NJM2068MD-TE1	
JK77	CJJ4S028Z	JACK , BOARD(3P)	ADV R-7100	
VR71	HSR2A018Z	VR , ENCODER	EC16B24T03B2ZZZ	

SEQ.	PART NO.	DESCRIPTION	SPECIFICATION	REMARKS
	CJDADVR7100A	**DVD SINGLE MECHANISM ASS'Y**	ADVR-7100	
	CIP11574DSMD	**DVD MPEG PCB SMD ASS'Y**	ADVR-7100	
	CIP11574DBSMD	**DVD MPEG BOTTOM SMD ASS'Y**	ADVR-7100	
C101	HCUS1E104ZF	CAP , CHIP	0.1UF ZF	
C120	HCUS1E104ZF	CAP , CHIP	0.1UF ZF	
C139	HCUS1H470JA	CAP , CHIP	47PF JA	
C148	HCUS1H2R2JA	CAP , CHIP	2.2PF JA	
C149	HCUS1H470JA	CAP , CHIP	47PF JA	
C151	HCUS1E104ZF	CAP , CHIP	0.1UF ZF	
C152	HCUS1E104ZF	CAP , CHIP	0.1UF ZF	
C200	HCUS1E104ZF	CAP , CHIP	0.1UF ZF	
C202	HCUS1E104ZF	CAP , CHIP	0.1UF ZF	
C203	HCUS1E104ZF	CAP , CHIP	0.1UF ZF	
C205	HCUS1H151JA	CAP , CHIP	150PF JA	
C206	HCUS1E104ZF	CAP , CHIP	0.1UF ZF	
C207	HCUS1E104ZF	CAP , CHIP	0.1UF ZF	
C208	HCUS1E104ZF	CAP , CHIP	0.1UF ZF	
C209	HCUS1E104ZF	CAP , CHIP	0.1UF ZF	
C210	HCUS1E104ZF	CAP , CHIP	0.1UF ZF	
C211	HCUS1E104ZF	CAP , CHIP	0.1UF ZF	
C212	HCUS1E104ZF	CAP , CHIP	0.1UF ZF	
C214	HCUS1E104ZF	CAP , CHIP	0.1UF ZF	
C215	HCUS1E104ZF	CAP , CHIP	0.1UF ZF	
C221	HCUS1E104ZF	CAP , CHIP	0.1UF ZF	
C222	HCUS1E104ZF	CAP , CHIP	0.1UF ZF	
C223	HCUS1E104ZF	CAP , CHIP	0.1UF ZF	
C224	HCUS1E104ZF	CAP , CHIP	0.1UF ZF	
C225	HCUS1E104ZF	CAP , CHIP	0.1UF ZF	
C400	HCUS1E104ZF	CAP , CHIP	0.1UF ZF	
C402	HCUS1H270JA	CAP , CHIP	27PF JA	
C403	HCUS1H270JA	CAP , CHIP	27PF JA	
C608	HRJ10DJ0R0T	RES , CHIP	(1/10W), 0OHM J	
C628	HCUS1E104ZF	CAP , CHIP	0.1UF ZF	
C629	HCUS1E104ZF	CAP , CHIP	0.1UF ZF	
C630	HCUS1E104ZF	CAP , CHIP	0.1UF ZF	
C631	HCUS1E104ZF	CAP , CHIP	0.1UF ZF	
C632	HCUS1E104ZF	CAP , CHIP	0.1UF ZF	
C633	HCUS1E104ZF	CAP , CHIP	0.1UF ZF	
C634	HCUS1E104ZF	CAP , CHIP	0.1UF ZF	
C635	HCUS1H100JA	CAP , CHIP	10PF JA	
C637	HCUS1E104ZF	CAP , CHIP	0.1UF ZF	
C639	HCUS1E104ZF	CAP , CHIP	0.1UF ZF	
C640	HCUS1E104ZF	CAP , CHIP	0.1UF ZF	
C641	HCUS1E104ZF	CAP , CHIP	0.1UF ZF	
C642	HCUS1E104ZF	CAP , CHIP	0.1UF ZF	
C643	HCUS1E104ZF	CAP , CHIP	0.1UF ZF	
C644	HCUS1E104ZF	CAP , CHIP	0.1UF ZF	
C645	HCUS1E104ZF	CAP , CHIP	0.1UF ZF	
C646	HCUS1E104ZF	CAP , CHIP	0.1UF ZF	
C647	HCUS1E104ZF	CAP , CHIP	0.1UF ZF	

SEQ.	PART NO.	DESCRIPTION	SPECIFICATION	REMARKS
C648	HCUS1H100JA	CAP , CHIP	10PF JA	
C649	HRJ10DJ0R0T	RES , CHIP	(1/10W), 0OHM J	
C651	HCUS1E104ZF	CAP , CHIP	0.1UF ZF	
C652	HCUS1E104ZF	CAP , CHIP	0.1UF ZF	
C653	HCUS1E104ZF	CAP , CHIP	0.1UF ZF	
C654	HCUS1E104ZF	CAP , CHIP	0.1UF ZF	
C655	HCUS1E104ZF	CAP , CHIP	0.1UF ZF	
C656	HCUS1E104ZF	CAP , CHIP	0.1UF ZF	
C657	HCUS1E104ZF	CAP , CHIP	0.1UF ZF	
C658	HCUS1E104ZF	CAP , CHIP	0.1UF ZF	
C659	HCUS1E104ZF	CAP , CHIP	0.1UF ZF	
C661	HCUS1E104ZF	CAP , CHIP	0.1UF ZF	
C662	HCUS1E104ZF	CAP , CHIP	0.1UF ZF	
C700	HCUS1E104ZF	CAP , CHIP	0.1UF ZF	
C705	HCUS1E104ZF	CAP , CHIP	0.1UF ZF	
C732	HCUS1E104ZF	CAP , CHIP	0.1UF ZF	
C737	HCUS1E104ZF	CAP , CHIP	0.1UF ZF	
C902	HCUS1E104ZF	CAP , CHIP	0.1UF ZF	
L701	HLZ9J003Z	BEAD , FERRITE	TE(CHIP)HK	
Q501	HVTKTD1304T	TR , CHIP(MUTE)		
Q502	HVTKTD1304T	TR , CHIP(MUTE)		
Q503	HVTKTD1304T	TR , CHIP(MUTE)		
Q701	HVTKRC102S	TR , CHIP		
R100	HRJ10DJ100T	RES , CHIP	(1/10W), 10OHM J	
R103	HRJ10DJ100T	RES , CHIP	(1/10W), 10OHM J	
R104	HRJ10DJ102T	RES , CHIP	(1/10W), 1KOHM J	
R105	HRJ10DJ0R0T	RES , CHIP	(1/10W), 0OHM J	
R107	HRJ10DJ0R0T	RES , CHIP	(1/10W), 0OHM J	
R120	HRJ10DJ101T	RES , CHIP	(1/10W), 100OHM J	
R121	HRJ10DJ101T	RES , CHIP	(1/10W), 100OHM J	
R122	HRJ10DJ0R0T	RES , CHIP	(1/10W), 0OHM J	
R140	HRJ10DJ0R0T	RES , CHIP	(1/10W), 0OHM J	
R141	HRJ10DJ220T	RES , CHIP	(1/10W), 22OHM J	
R142	HRJ10DJ220T	RES , CHIP	(1/10W), 22OHM J	
R143	HRJ10DJ181T	RES , CHIP	(1/10W), 180OHM J	
R144	HRJ10DJ102T	RES , CHIP	(1/10W), 1KOHM J	
R145	HRJ10DJ104T	RES , CHIP	(1/10W), 100KOHM J	
R150	HRJ10DJ101T	RES , CHIP	(1/10W), 100OHM J	
R152	HRJ10DJ472T	RES , CHIP	(1/10W), 4.7KOHM J	
R153	HRJ10DJ472T	RES , CHIP	(1/10W), 4.7KOHM J	
R154	HRJ10DJ472T	RES , CHIP	(1/10W), 4.7KOHM J	
R155	HRJ10DJ472T	RES , CHIP	(1/10W), 4.7KOHM J	
R156	HRJ10DJ220T	RES , CHIP	(1/10W), 22OHM J	
R200	HRJ10DJ102T	RES , CHIP	(1/10W), 1KOHM J	
R201	HRJ10DJ472T	RES , CHIP	(1/10W), 4.7KOHM J	
R205	HRJ10DJ470T	RES , CHIP	(1/10W), 47OHM J	
R206	HRJ10DJ100T	RES , CHIP	(1/10W), 10OHM J	
R212	HRJ10DJ100T	RES , CHIP	(1/10W), 10OHM J	
R213	HRJ10DJ100T	RES , CHIP	(1/10W), 10OHM J	
R215	HRJ10DJ472T	RES , CHIP	(1/10W), 4.7KOHM J	

SEQ.	PART NO.	DESCRIPTION	SPECIFICATION	REMARKS
R216	HRJ10DJ100T	RES , CHIP	(1/10W), 10OHM J	
R217	HRJ10DJ470T	RES , CHIP	(1/10W), 47OHM J	
R218	HRJ10DJ470T	RES , CHIP	(1/10W), 47OHM J	
R221	HRJ10DJ473T	RES , CHIP	(1/10W), 47KOHM J	
R229	HRJ10DJ100T	RES , CHIP	(1/10W), 10OHM J	
R267	HRJ10DJ330T	RES , CHIP	(1/10W), 33OHM J	
R269	HRJ10DJ472T	RES , CHIP	(1/10W), 4.7KOHM J	
R270	HRJ10DJ0R0T	RES , CHIP	(1/10W), 0OHM J	
R282	HRJ10DJ271T	RES , CHIP	(1/10W), 270OHM J	
R285	HRJ10DJ0R0T	RES , CHIP	(1/10W), 0OHM J	
R286	HRJ10DJ472T	RES , CHIP	(1/10W), 4.7KOHM J	
R287	HRJ10DJ472T	RES , CHIP	(1/10W), 4.7KOHM J	
R288	HRJ10DJ472T	RES , CHIP	(1/10W), 4.7KOHM J	
R289	HRJ10DJ472T	RES , CHIP	(1/10W), 4.7KOHM J	
R290	HRJ10DJ472T	RES , CHIP	(1/10W), 4.7KOHM J	
R291	HRJ10DJ472T	RES , CHIP	(1/10W), 4.7KOHM J	
R292	HRJ10DJ472T	RES , CHIP	(1/10W), 4.7KOHM J	
R293	HRJ10DJ472T	RES , CHIP	(1/10W), 4.7KOHM J	
R294	HRJ10DJ472T	RES , CHIP	(1/10W), 4.7KOHM J	
R295	HRJ10DJ472T	RES , CHIP	(1/10W), 4.7KOHM J	
R296	HRJ10DJ472T	RES , CHIP	(1/10W), 4.7KOHM J	
R297	HRJ10DJ472T	RES , CHIP	(1/10W), 4.7KOHM J	
R298	HRJ10DJ472T	RES , CHIP	(1/10W), 4.7KOHM J	
R301	HRJ10DJ472T	RES , CHIP	(1/10W), 4.7KOHM J	
R302	HRJ10DJ472T	RES , CHIP	(1/10W), 4.7KOHM J	
R400	HRJ10DJ472T	RES , CHIP	(1/10W), 4.7KOHM J	
R402	HRJ10DJ104T	RES , CHIP	(1/10W), 100KOHM J	
R403	HRJ10DJ331T	RES , CHIP	(1/10W), 330OHM J	
R404	HRJ10DJ121T	RES , CHIP	(1/10W), 120OHM J	
R405	HRJ10DJ121T	RES , CHIP	(1/10W), 120OHM J	
R530	HRJ10DJ102T	RES , CHIP	(1/10W), 1KOHM J	
R531	HRJ10DJ102T	RES , CHIP	(1/10W), 1KOHM J	
R532	HRJ10DJ102T	RES , CHIP	(1/10W), 1KOHM J	
R700	HRJ10DJ0R0T	RES , CHIP	(1/10W), 0OHM J	
R709	HRJ10DJ0R0T	RES , CHIP	(1/10W), 0OHM J	
R710	HRJ10DJ0R0T	RES , CHIP	(1/10W), 0OHM J	
R711	HRJ10DJ470T	RES , CHIP	(1/10W), 47OHM J	
R713	HRJ10DJ0R0T	RES , CHIP	(1/10W), 0OHM J	
R717	HRJ10DJ0R0T	RES , CHIP	(1/10W), 0OHM J	
R729	HRJ10DJ100T	RES , CHIP	(1/10W), 10OHM J	
R730	HLZ9J003Z	BEAD , FERRITE	TE(CHIP)HK	
R731	HRJ10DJ100T	RES , CHIP	(1/10W), 10OHM J	
R734	HRJ10DJ471T	RES , CHIP	(1/10W), 470OHM J	
R735	HRJ10DJ183T	RES , CHIP	(1/10W), 18KOHM J	
R736	HRJ10DJ100T	RES , CHIP	(1/10W), 10OHM J	
R737	HRJ10DJ100T	RES , CHIP	(1/10W), 10OHM J	
R738	HRJ10DJ100T	RES , CHIP	(1/10W), 10OHM J	
R739	HRJ10DJ103T	RES , CHIP	(1/10W), 10KOHM J	
R741	HRJ10DJ330T	RES , CHIP	(1/10W), 33OHM J	
R742	HRJ10DJ330T	RES , CHIP	(1/10W), 33OHM J	

SEQ.	PART NO.	DESCRIPTION	SPECIFICATION	REMARKS
R743	HRJ10DJ0R0T	RES , CHIP	(1/10W), 0OHM J	
R745	HRJ10DJ102T	RES , CHIP	(1/10W), 1KOHM J	
R746	HRJ10DJ4R7T	RES , CHIP	(1/10W), 4.7OHM J	
R747	HRJ10DJ4R7T	RES , CHIP	(1/10W), 4.7OHM J	
R748	HRJ10DJ0R0T	RES , CHIP	(1/10W), 0OHM J	
R755	HRJ10DJ0R0T	RES , CHIP	(1/10W), 0OHM J	
R756	HRJ10DJ0R0T	RES , CHIP	(1/10W), 0OHM J	
R757	HRJ10DJ0R0T	RES , CHIP	(1/10W), 0OHM J	
	CIP11574DTSMD	**DVD MPEG TOP SMD ASS'Y**		
C100	HCEC1CRV2100T	CAP , ELECT(SMD)		
C121	HCEC0JRV2470T	CAP , ELECT(SMD)		
C130	HCUS1E104ZF	CAP , CHIP	0.1UF ZF	
C131	HCEC0JRV2470T	CAP , ELECT(SMD)		
C140	HCEC0JRV2470T	CAP , ELECT(SMD)		
C141	HCUS1E104ZF	CAP , CHIP	0.1UF ZF	
C142	HCEC1CRV2100T	CAP , ELECT(SMD)		
C143	HCEC1CRV2100T	CAP , ELECT(SMD)		
C144	HCEC1CRV2100T	CAP , ELECT(SMD)		
C145	HCEC1CRV2100T	CAP , ELECT(SMD)		
C146	HCEC0JRV2470T	CAP , ELECT(SMD)		
C147	HCUS1E104ZF	CAP , CHIP	0.1UF ZF	
C150	HCUS1E104ZF	CAP , CHIP	0.1UF ZF	
C153	HCEC0JRV2470T	CAP , ELECT(SMD)		
C154	HCUS1E104ZF	CAP , CHIP	0.1UF ZF	
C201	HCEC0JRV2470T	CAP , ELECT(SMD)		
C213	HCUS1E104ZF	CAP , CHIP	0.1UF ZF	
C216	HCEC1CRV2100T	CAP , ELECT(SMD)		
C217	HCEC1CRV2100T	CAP , ELECT(SMD)		
C218	HCEC1CRV2100T	CAP , ELECT(SMD)		
C219	HCEC1CRV2100T	CAP , ELECT(SMD)		
C220	HCEC0JRV2470T	CAP , ELECT(SMD)		
C226	HCEC0JRV2470T	CAP , ELECT(SMD)		
C251	HCEC0JRV2470T	CAP , ELECT(SMD)		
C252	HCUS1E104ZF	CAP , CHIP	0.1UF ZF	
C253	HCEC0JRV2470T	CAP , ELECT(SMD)		
C254	HCUS1E104ZF	CAP , CHIP	0.1UF ZF	
C255	HCEC0JRV2470T	CAP , ELECT(SMD)		
C256	HCEC0JRV2470T	CAP , ELECT(SMD)		
C257	HCEC0JRV2470T	CAP , ELECT(SMD)		
C310	HCUS1E104ZF	CAP , CHIP	0.1UF ZF	
C401	HCEC0JRV2470T	CAP , ELECT(SMD)		
C420	HCEC0JRV2101T	CAP , ELECT(SMD)		
C421	HCUS1E104ZF	CAP , CHIP	0.1UF ZF	
C422	HCEC0JRV2101T	CAP , ELECT(SMD)		
C423	HCUS1E104ZF	CAP , CHIP	0.1UF ZF	
C424	HCEC0JRV2101T	CAP , ELECT(SMD)		
C425	HCUS1E104ZF	CAP , CHIP	0.1UF ZF	
C426	HCEC0JRV2101T	CAP , ELECT(SMD)		
C427	HCUS1E104ZF	CAP , CHIP	0.1UF ZF	
C428	HCEC0JRV2470T	CAP , ELECT(SMD)		

SEQ.	PART NO.	DESCRIPTION	SPECIFICATION	REMARKS
C429	HCUS1E104ZF	CAP , CHIP	0.1UF ZF	
C430	HCUS1E104ZF	CAP , CHIP	0.1UF ZF	
C431	HCEC0JRV2101T	CAP , ELECT(SMD)		
C521	HCUS1E104ZF	CAP , CHIP	0.1UF ZF	
C522	HCEC1CRV2100T	CAP , ELECT(SMD)		
C523	HCUS1E104ZF	CAP , CHIP	0.1UF ZF	
C524	HCEC0JRV2470T	CAP , ELECT(SMD)		
C525	HCUS1E104ZF	CAP , CHIP	0.1UF ZF	
C526	HCEC0JRV2470T	CAP , ELECT(SMD)		
C601	HCUS1E104ZF	CAP , CHIP	0.1UF ZF	
C610	HCUS1E104ZF	CAP , CHIP	0.1UF ZF	
C611	HCUS1E104ZF	CAP , CHIP	0.1UF ZF	
C612	HCUS1E104ZF	CAP , CHIP	0.1UF ZF	
C613	HCUS1E104ZF	CAP , CHIP	0.1UF ZF	
C615	HCUS1E104ZF	CAP , CHIP	0.1UF ZF	
C616	HCUS1E104ZF	CAP , CHIP	0.1UF ZF	
C619	HCUS1E104ZF	CAP , CHIP	0.1UF ZF	
C620	HCUS1E104ZF	CAP , CHIP	0.1UF ZF	
C621	HRJ10DJ0R0T	RES , CHIP	(1/10W), 0OHM J	
C622	HCUS1E104ZF	CAP , CHIP	0.1UF ZF	
C624	HCUS1E104ZF	CAP , CHIP	0.1UF ZF	
C625	HCUS1E104ZF	CAP , CHIP	0.1UF ZF	
C626	HCUS1E104ZF	CAP , CHIP	0.1UF ZF	
C627	HRJ10DJ0R0T	RES , CHIP	(1/10W), 0OHM J	
C638	HCUS1E104ZF	CAP , CHIP	0.1UF ZF	
C660	HCUS1E104ZF	CAP , CHIP	0.1UF ZF	
C663	HCUS1E104ZF	CAP , CHIP	0.1UF ZF	
C664	HCUS1E104ZF	CAP , CHIP	0.1UF ZF	
C701	HCEC0JRV2470T	CAP , ELECT(SMD)	47UF/6.3V	
C706	HCEC0JRV2470T	CAP , ELECT(SMD)	47UF/6.3V	
C733	HCEC0JRV2470T	CAP , ELECT(SMD)	47UF/6.3V	
C738	HCEC0JRV2470T	CAP , ELECT(SMD)	47UF/6.3V	
C739	HCUS1H101JA	CAP , CHIP	100PF JA	
C740	HCUS1H101JA	CAP , CHIP	100PF JA	
C901	HCEC1CRV2100T	CAP , ELECT(SMD)	10UF/16V	
D401	HVDRB160L60TE25	DIODE , SCHOTTKEY BARRIER	RB160L-60TE25	
IC11	HVIHY29LV160B90	I.C , 16M FLASH MEMORY	HYNIX	
IC12	HVI74LVC374ADBR	I.C	SN74LVC374	
IC13	HVI74LVC244ADBR	I.C	SN74LVC244	
IC14	HVIAK4112BVF	I.C , DIR	AK4112BVF	
IC15	HVI74LVC157ADBR	I.C , MULTIPLEXER	SN74LVC157A	
IC21	HVIBR24C16F	I.C , EEPROM(16K)	2K*8SOP8	
IC31	HVIBU2098F	I.C , I2C BUS	ROHM	
IC41	HVIPCM1801U	I.C , A/D CONVERTOR	B/B	
IC51	HVIHY57V641620D	I.C , 64MSDRAM	HYNIX	
IC61	HVIES6028FW	I.C , DVD MPEG		
IC70	HVI74VHC04MX	I.C , INVERTER	74VHC04M	
IC80	HVIRC1117ST	I.C , ADJREGULATOR	RC1117ST	
IC90	HVIRC1117ST	I.C , ADJREGULATOR	RC1117ST	
IC93	HVIBA7609F	I.C , VIDEOSWITCH	ROHM	

SEQ.	PART NO.	DESCRIPTION	SPECIFICATION	REMARKS
IC94	HVIBA7622F	I.C , VIDEO AMP	ROHM	
IC95	HVIBA7622F	I.C , VIDEO AMP	ROHM	
L130	HLZ9J003Z	BEAD , FERRITE(CHIP)	BLM21A121SPT	
L150	HLZ9J003Z	BEAD , FERRITE(CHIP)	BLM21A121SPT	
L401	HLZ9J003Z	BEAD , FERRITE(CHIP)	BLM21A121SPT	
L402	HLZ9J003Z	BEAD , FERRITE(CHIP)	BLM21A121SPT	
L403	HLZ9J003Z	BEAD , FERRITE(CHIP)	BLM21A121SPT	
L404	HLZ9J003Z	BEAD , FERRITE(CHIP)	BLM21A121SPT	
L405	HLZ9J003Z	BEAD , FERRITE(CHIP)	BLM21A121SPT	
L500	HLZ9J003Z	BEAD , FERRITE(CHIP)	BLM21A121SPT	
RA20	HRJ104DJ330T	RES , 4ARRAY(1608*4)	33OHM	
RA21	HRJ104DJ330T	RES , 4ARRAY(1608*4)	33OHM	
RA23	HRJ104DJ330T	RES , 4ARRAY(1608*4)	33OHM	
RA24	HRJ104DJ330T	RES , 4ARRAY(1608*4)	33OHM	
RA25	HRJ104DJ330T	RES , 4ARRAY(1608*4)	33OHM	
RA26	HRJ104DJ330T	RES , 4ARRAY(1608*4)	33OHM	
RA27	HRJ104DJ330T	RES , 4ARRAY(1608*4)	33OHM	
RA28	HRJ104DJ330T	RES , 4ARRAY(1608*4)	33OHM	
RA30	HRJ104DJ330T	RES , 4ARRAY(1608*4)	33OHM	
RA31	HRJ104DJ330T	RES , 4ARRAY(1608*4)	33OHM	
RA32	HRJ104DJ330T	RES , 4ARRAY(1608*4)	33OHM	
RA33	HRJ104DJ330T	RES , 4ARRAY(1608*4)	33OHM	
RA34	HRJ104DJ330T	RES , 4ARRAY(1608*4)	33OHM	
RA35	HRJ104DJ330T	RES , 4ARRAY(1608*4)	33OHM	
R130	HRJ10DJ103T	RES , CHIP	(1/10W), 10KOHM J	
R131	HRJ10DJ103T	RES , CHIP	(1/10W), 10KOHM J	
R132	HRJ10DJ103T	RES , CHIP	(1/10W), 10KOHM J	
R133	HRJ10DJ102T	RES , CHIP	(1/10W), 1KOHM J	
R134	HRJ10DJ103T	RES , CHIP	(1/10W), 10KOHM J	
R135	HRJ10DJ103T	RES , CHIP	(1/10W), 10KOHM J	
R136	HRJ10DJ103T	RES , CHIP	(1/10W), 10KOHM J	
R137	HRJ10DJ0R0T	RES , CHIP	(1/10W), 0OHM J	
R138	HRJ10DJ100T	RES , CHIP	(1/10W), 10OHM J	
R139	HRJ10DJ100T	RES , CHIP	(1/10W), 10OHM J	
R151	HRJ10DJ472T	RES , CHIP	(1/10W), 4.7KOHM J	
R207	HRJ10DJ472T	RES , CHIP	(1/10W), 4.7KOHM J	
R208	HRJ10DJ472T	RES , CHIP	(1/10W), 4.7KOHM J	
R214	HRJ10DJ472T	RES , CHIP	(1/10W), 4.7KOHM J	
R218	HRJ10DJ101T	RES , CHIP	(1/10W), 100OHM J	
R219	HRJ10DJ100T	RES , CHIP	(1/10W), 10OHM J	
R222	HRJ10DJ473T	RES , CHIP	(1/10W), 47KOHM J	
R223	HRJ10DJ102T	RES , CHIP	(1/10W), 1KOHM J	
R224	HRJ10DJ102T	RES , CHIP	(1/10W), 1KOHM J	
R225	HRJ10DJ102T	RES , CHIP	(1/10W), 1KOHM J	
R230	HRJ10DJ330T	RES , CHIP	(1/10W), 33OHM J	
R231	HRJ10DJ330T	RES , CHIP	(1/10W), 33OHM J	
R268	HRJ10DJ473T	RES , CHIP	(1/10W), 47KOHM J	
R280	HRJ10DJ750T	RES , CHIP	(1/10W), 75OHMJ	
R281	HRJ10DJ750T	RES , CHIP	(1/10W), 75OHMJ	
R283	HRJ10DJ750T	RES , CHIP	(1/10W), 75OHMJ	

SEQ.	PART NO.	DESCRIPTION	SPECIFICATION	REMARKS
R284	HRJ10DJ750T	RES , CHIP	(1/10W), 75OHMJ	
R310	HRJ10DJ472T	RES , CHIP	(1/10W), 4.7KOHM J	
R311	HRJ10DJ472T	RES , CHIP	(1/10W), 4.7KOHM J	
R312	HRJ10DJ472T	RES , CHIP	(1/10W), 4.7KOHM J	
R313	HRJ10DJ330T	RES , CHIP	(1/10W), 33OHM J	
R314	HRJ10DJ330T	RES , CHIP	(1/10W), 33OHM J	
R352	HRJ10DJ472T	RES , CHIP	(1/10W), 4.7KOHM J	
R401	HRJ10DJ101T	RES , CHIP	(1/10W), 100OHM J	
R407	HRJ10DJ330T	RES , CHIP	(1/10W), 33OHM J	
R409	HRJ10DJ330T	RES , CHIP	(1/10W), 33OHM J	
R420	HRJ10DJ221T	RES , CHIP	(1/10W), 220OHM J	
R421	HRJ10DJ331T	RES , CHIP	(1/10W), 330OHM J	
R422	HRJ10DJ221T	RES , CHIP	(1/10W), 220OHM J	
R423	HRJ10DJ361T	RES , CHIP	(1/10W), 360OHM J	
R506	HRJ10DJ470T	RES , CHIP	(1/10W), 47OHM J	
R507	HRJ10DJ560T	RES , CHIP	(1/10W), 56OHM J	
R508	HRJ10DJ750T	RES , CHIP	(1/10W), 75OHMJ	
R520	HRJ10DJ0R0T	RES , CHIP	(1/10W), 0OHM J	
R521	HRJ10DJ750T	RES , CHIP	(1/10W), 75OHMJ	
R522	HRJ10DJ750T	RES , CHIP	(1/10W), 75OHMJ	
R523	HRJ10DJ750T	RES , CHIP	(1/10W), 75OHMJ	
R524	HRJ10DJ0R0T	RES , CHIP	(1/10W), 0OHM J	
R525	HRJ10DJ0R0T	RES , CHIP	(1/10W), 0OHM J	
R526	HRJ10DJ0R0T	RES , CHIP	(1/10W), 0OHM J	
R705	HRJ10DJ0R0T	RES , CHIP	(1/10W), 0OHM J	
R712	HRJ10DJ0R0T	RES , CHIP	(1/10W), 0OHM J	
R714	HRJ10DJ0R0T	RES , CHIP	(1/10W), 0OHM J	
R718	HRJ10DJ0R0T	RES , CHIP	(1/10W), 0OHM J	
R740	HRJ10DJ0R0T	RES , CHIP	(1/10W), 0OHM J	
R744	HRJ10DJ4R7T	RES , CHIP	(1/10W), 4.7OHM J	
R749	HRJ10DJ330T	RES , CHIP	(1/10W), 33OHM J	
R750	HRJ10DJ471T	RES , CHIP	(1/10W), 470OHM J	
R751	HRJ10DJ100T	RES , CHIP	(1/10W), 10OHM J	
R901	HRJ10DJ0R0T	RES , CHIP	(1/10W), 0OHM J	
X401	HOX27000E180S	CRYSTAL , CHIP(27MHZ , SMD)	HC-49/US	
	CUP11574Z	PCB , DVD	ADVR-7100	
CN10	KJP13GA117ZG	WAFER , CARD CABLE	GF102-13S-TS	
CN11	KJP32GA117ZG	WAFER , CARD CABLE	GF102-32S-TS	
CN12	KJP40GB80ZP	40P HEADER(ANGLE TYPE)	2110DR40G	
CN13	KJP05GA19ZM	WAFER	MOLEX53014-0510	
CN14	KJP02GA19ZM	WAFER		
	CLZ9W009Z	FERRITE , RING		
	CWBADVR710BN93	WIRE ASS'Y(4P)	ADVR-7100	
	CWC1B2A13A180B	CABLE , CARD CABLE		
	CWC1B4A32A145B	CABLE , CARD CABLE		
	CWE4202120AR	WIRE ASS`Y	HTS-3000	
	CWZHTS3000BN12	CABLE , ATAPI(FLATE, 40P)	HTS-3000(80M/M)	
	CWZQDR7100CN65	WIRE A'SSY	QDR-7100CC	
	HJDRL-A70060R5	1 DVD MECHANISM	RMC	

SEQ.	PART NO.	DESCRIPTION	SPECIFICATION	REMARKS
	COP11571C	**MAIN PCB ASS'Y**	QDR-7100	
	CIP11571C	**MAIN PCB AUTO ASS'Y**	QDR-7100	
	CIP11571CSMD	**MAIN PCB SMD ASS'Y**	QDR-7100	
	CUP11571Z	**PCB , MAIN**	ADVR-7100	
BD77	HLZ9Z008Z	CHIP , BEAD		
BD78	HLZ9Z008Z	CHIP , BEAD		
C107	HCUS1H101JA	CAP , CHIP	100PF, 50V	
C108	HCUS1H101JA	CAP , CHIP	100PF, 50V	
C110	HCUS1H101JA	CAP , CHIP	100PF, 50V	
C129	HCUS1H103KC	CAP , CHIP	0.01UF, 50V	
C130	HCUS1H103KC	CAP , CHIP	0.01UF, 50V	
C138	HCUS1H101JA	CAP , CHIP	100PF, 50V	
C139	HCUS1H101JA	CAP , CHIP	100PF, 50V	
C144	HCUS1H220JA	CAP , CHIP	22PF, 50V	
C155	HCUS1H101JA	CAP , CHIP	100PF, 50V	
C156	HCUS1H101JA	CAP , CHIP	100PF, 50V	
C161	HCUS1H103KC	CAP , CHIP	0.01UF, 50V	
C163	HCUS1H103KC	CAP , CHIP	0.01UF, 50V	
C165	HCUS1H821JA	CAP , CHIP	820PF, 50V	
C166	HCUS1H103KC	CAP , CHIP	0.01UF, 50V	
C168	HCUS1H821JA	CAP , CHIP	820PF, 50V	
C169	HCUS1H821JA	CAP , CHIP	820PF, 50V	
C171	HCUS1H821JA	CAP , CHIP	820PF, 50V	
C173	HCUS1H821JA	CAP , CHIP	820PF, 50V	
C175	HCUS1H821JA	CAP , CHIP	820PF, 50V	
C179	HCUS1H221JA	CAP , CHIP	220PF, 50V	
C180	HCUS1H221JA	CAP , CHIP	220PF, 50V	
C181	HCUS1H221JA	CAP , CHIP	220PF, 50V	
C182	HCUS1H221JA	CAP , CHIP	220PF, 50V	
C184	HCUS1H101JA	CAP , CHIP	100PF, 50V	
C191	HCUS1H103KC	CAP , CHIP	0.01UF, 50V	
C193	HCUS1H101JA	CAP , CHIP	100PF, 50V	
C194	HCUS1H101JA	CAP , CHIP	100PF, 50V	
C198	HCUS1H101JA	CAP , CHIP	100PF, 50V	
C207	HCUS1H101JA	CAP , CHIP	100PF, 50V	
C209	HCUS1H101JA	CAP , CHIP	100PF, 50V	
C210	HCUS1H101JA	CAP , CHIP	100PF, 50V	
C212	HCUS1H101JA	CAP , CHIP	100PF, 50V	
C233	HCUS1H151JA	CAP , CHIP	150PF, 50V	
C234	HCUS1H151JA	CAP , CHIP	150PF, 50V	
C241	HCUS1H101JA	CAP , CHIP	100PF, 50V	
C242	HCUS1H101JA	CAP , CHIP	100PF, 50V	
C243	HCUS1H101JA	CAP , CHIP	100PF, 50V	
C244	HCUS1H101JA	CAP , CHIP	100PF, 50V	
C246	HCUS1H103KC	CAP , CHIP	0.01UF, 50V	
C247	HCUS1H103KC	CAP , CHIP	0.01UF, 50V	
C255	HCUS1H151JA	CAP , CHIP	150PF, 50V	
C256	HCUS1H151JA	CAP , CHIP	150PF, 50V	
C258	HCUS1H330JA	CAP , CHIP	33PF, 50V	
C261	HCUS1H101JA	CAP , CHIP	100PF, 50V	

SEQ.	PART NO.	DESCRIPTION	SPECIFICATION	REMARKS
C272	HCUS1H103KC	CAP , CHIP	0.01UF, 50V	
C287	HCUS1H271JA	CAP , CHIP	270PF, 50V	
C288	HCUS1H271JA	CAP , CHIP	270PF, 50V	
C323	HCUS1H101JA	CAP , CHIP	100PF, 50V	
C324	HCUS1H101JA	CAP , CHIP	100PF, 50V	
C327	HCUS1H103KC	CAP , CHIP	0.01UF, 50V	
C328	HCUS1H103KC	CAP , CHIP	0.01UF, 50V	
C333	HCUS1H101JA	CAP , CHIP	100PF, 50V	
C334	HCUS1H101JA	CAP , CHIP	100PF, 50V	
C337	HCUS1H103KC	CAP , CHIP	0.01UF, 50V	
C338	HCUS1H103KC	CAP , CHIP	0.01UF, 50V	
C353	HCUS1H101JA	CAP , CHIP	100PF, 50V	
C354	HCUS1H101JA	CAP , CHIP	100PF, 50V	
C361	HCUS1H103KC	CAP , CHIP	0.01UF, 50V	
C363	HCUS1H103KC	CAP , CHIP	0.01UF, 50V	
C405	HCUS1H101JA	CAP , CHIP	100PF, 50V	
C406	HCUS1H101JA	CAP , CHIP	100PF, 50V	
C409	HCUS1H101JA	CAP , CHIP	100PF, 50V	
C410	HCUS1H101JA	CAP , CHIP	100PF, 50V	
C412	HCUS1H103KC	CAP , CHIP	0.01UF, 50V	
C415	HCUS1E104ZF	CAP , CHIP	0.1UF ZF	
C416	HCUS1H101JA	CAP , CHIP	100PF, 50V	
C417	HCUS1E104ZF	CAP , CHIP	0.1UF ZF	
C418	HCUS1H220JA	CAP , CHIP	22PF, 50V	
C435	HCUS1H101JA	CAP , CHIP	100PF, 50V	
C439	HCUS1H101JA	CAP , CHIP	100PF, 50V	
C455	HCUS1H271JA	CAP , CHIP	270PF, 50V	
C457	HCUS1H103KC	CAP , CHIP	0.01UF, 50V	
C459	HCUS1H103KC	CAP , CHIP	0.01UF, 50V	
C477	HCUS1H101JA	CAP , CHIP	100PF, 50V	
C478	HCUS1H101JA	CAP , CHIP	100PF, 50V	
C571	HCUS1H100JA	CAP , CHIP	10PF, 50V	
C572	HCUS1H100JA	CAP , CHIP	10PF, 50V	
C573	HCUS1H100JA	CAP , CHIP	10PF, 50V	
C574	HCUS1H100JA	CAP , CHIP	10PF, 50V	
C575	HCUS1H100JA	CAP , CHIP	10PF, 50V	
C576	HCUS1H100JA	CAP , CHIP	10PF, 50V	
C591	HCUS1H100JA	CAP , CHIP	10PF, 50V	
C592	HCUS1H100JA	CAP , CHIP	10PF, 50V	
C593	HCUS1H100JA	CAP , CHIP	10PF, 50V	
C594	HCUS1H100JA	CAP , CHIP	10PF, 50V	
C595	HCUS1H100JA	CAP , CHIP	10PF, 50V	
C596	HCUS1H100JA	CAP , CHIP	10PF, 50V	
C597	HCUS1H100JA	CAP , CHIP	10PF, 50V	
C598	HCUS1H100JA	CAP , CHIP	10PF, 50V	
C599	HCUS1H100JA	CAP , CHIP	10PF, 50V	
C600	HCUS1H100JA	CAP , CHIP	10PF, 50V	
C601	HCUS1H100JA	CAP , CHIP	10PF, 50V	
C602	HCUS1H100JA	CAP , CHIP	10PF, 50V	
C603	HCUS1H100JA	CAP , CHIP	10PF, 50V	

SEQ.	PART NO.	DESCRIPTION	SPECIFICATION	REMARKS
C614	HCUS1H100JA	CAP , CHIP	10PF, 50V	
C621	HCUS1H100JA	CAP , CHIP	10PF, 50V	
C622	HCUS1H100JA	CAP , CHIP	10PF, 50V	
C623	HCUS1H100JA	CAP , CHIP	10PF, 50V	
C624	HCUS1H100JA	CAP , CHIP	10PF, 50V	
C625	HCUS1H100JA	CAP , CHIP	10PF, 50V	
C626	HCUS1H100JA	CAP , CHIP	10PF, 50V	
C631	HCUS1H101JA	CAP , CHIP	100PF, 50V	
C632	HCUS1H470JA	CAP , CHIP	47PF, 50V	
C633	HCUS1H101JA	CAP , CHIP	100PF, 50V	
C634	HCUS1H101JA	CAP , CHIP	100PF, 50V	
C635	HCUS1H100JA	CAP , CHIP	10PF, 50V	
C636	HCUS1H100JA	CAP , CHIP	10PF, 50V	
C637	HCUS1H100JA	CAP , CHIP	10PF, 50V	
C642	HCUS1H103KC	CAP , CHIP	0.01UF, 50V	
C646	HCUS1H103KC	CAP , CHIP	0.01UF, 50V	
C672	HCUS1H103KC	CAP , CHIP	0.01UF, 50V	
C682	HCUS1H221JA	CAP , CHIP	220PF, 50V	
C683	HCUS1H221JA	CAP , CHIP	220PF, 50V	
C722	HCUS1H103KC	CAP , CHIP	0.01UF, 50V	
C753	HCUS1E104ZF	CAP , CHIP	0.1UF ZF	
C754	HCUS1E104ZF	CAP , CHIP	0.1UF ZF	
C755	HCUS1E104ZF	CAP , CHIP	0.1UF ZF	
C756	HCUS1E104ZF	CAP , CHIP	0.1UF ZF	
C757	HCUS1E104ZF	CAP , CHIP	0.1UF ZF	
C758	HCUS1E104ZF	CAP , CHIP	0.1UF ZF	
C759	HCUS1E104ZF	CAP , CHIP	0.1UF ZF	
C760	HCUS1E104ZF	CAP , CHIP	0.1UF ZF	
C761	HCUS1E104ZF	CAP , CHIP	0.1UF ZF	
C762	HCSGA0J2R2B	CAP , CHIP	TANTAL, 2.2UF, 6.3V	
C763	HCSGA0J2R2B	CAP , CHIP	TANTAL, 2.2UF, 6.3V	
C764	HCUS1E104ZF	CAP , CHIP	0.1UF ZF	
C765	HCUS1E104ZF	CAP , CHIP	0.1UF ZF	
C767	HCUS1E104ZF	CAP , CHIP	0.1UF ZF	
C768	HCUS1E104ZF	CAP , CHIP	0.1UF ZF	
C769	HCUS1E104ZF	CAP , CHIP	0.1UF ZF	
C770	HCUS1E104ZF	CAP , CHIP	0.1UF ZF	
C771	HCUS1H102KC	CAP , CHIP	1000PF, 50V	
C772	HCUS1H331JA	CAP , CHIP	330PF, 50V	
C773	HCUS1H101JA	CAP , CHIP	100PF, 50V	
C774	HCSGA0J220B	CAP , CHIP	TANTAL, 2.2UF, 6.3V	
C775	HCUS1E104ZF	CAP , CHIP	0.1UF ZF	
C776	HCUS1E104ZF	CAP , CHIP	0.1UF ZF	
C786	HCUS1H102KC	CAP , CHIP	1000PF, 50V	
C789	HCUS1E104ZF	CAP , CHIP	0.1UF ZF	
C801	HCUS1E104ZF	CAP , CHIP	0.1UF ZF	
C802	HCUP2A104KC	CAP , CHIP	0.1UF, 100V	
C803	HCUS1E104ZF	CAP , CHIP	0.1UF ZF	
C804	HCUP2A104KC	CAP , CHIP	0.1UF, 100V	
C806	HCUP1H225ME	CAP , CHIP	2.2UF, 50V	

SEQ.	PART NO.	DESCRIPTION	SPECIFICATION	REMARKS
C807	HCUP1H225ME	CAP , CHIP	2.2UF, 50V	
C808	HCUP2A104KC	CAP , CHIP	0.1UF, 100V	
C809	HCUP2A104KC	CAP , CHIP	0.1UF, 100V	
C810	HCUS1E104ZF	CAP , CHIP	0.1UF ZF	
C811	HCUS1H331JA	CAP , CHIP	330PF, 50V	
C812	HCUS1H331JA	CAP , CHIP	330PF, 50V	
C813	HCUP2A104KC	CAP , CHIP	0.1UF, 100V	
C814	HCUP2A104KC	CAP , CHIP	0.1UF, 100V	
C815	HCUP2A104KC	CAP , CHIP	0.1UF, 100V	
C816	HCUP2A104KC	CAP , CHIP	0.1UF, 100V	
C817	HCUP2A104KC	CAP , CHIP	0.1UF, 100V	
C818	HCUP2A104KC	CAP , CHIP	0.1UF, 100V	
C819	HCUP2A104KC	CAP , CHIP	0.1UF, 100V	
C820	HCUP2A104KC	CAP , CHIP	0.1UF, 100V	
C825	HCUS1H103KC	CAP , CHIP	0.01UF, 50V	
C826	HCUS1H103KC	CAP , CHIP	0.01UF, 50V	
C827	HCUS1H103KC	CAP , CHIP	0.01UF, 50V	
C828	HCUS1H103KC	CAP , CHIP	0.01UF, 50V	
C831	HCUS1E104ZF	CAP , CHIP	0.1UF ZF	
C832	HCUP2A104KC	CAP , CHIP	0.1UF, 100V	
C833	HCUS1E104ZF	CAP , CHIP	0.1UF ZF	
C834	HCUP2A104KC	CAP , CHIP	0.1UF, 100V	
C836	HCUP1H225ME	CAP , CHIP	2.2UF, 50V	
C837	HCUP1H225ME	CAP , CHIP	2.2UF, 50V	
C838	HCUP2A104KC	CAP , CHIP	0.1UF, 100V	
C839	HCUP2A104KC	CAP , CHIP	0.1UF, 100V	
C840	HCUS1E104ZF	CAP , CHIP	0.1UF ZF	
C841	HCUS1H331JA	CAP , CHIP	330PF, 50V	
C842	HCUS1H331JA	CAP , CHIP	330PF, 50V	
C843	HCUP2A104KC	CAP , CHIP	0.1UF, 100V	
C844	HCUP2A104KC	CAP , CHIP	0.1UF, 100V	
C845	HCUP2A104KC	CAP , CHIP	0.1UF, 100V	
C846	HCUP2A104KC	CAP , CHIP	0.1UF, 100V	
C847	HCUP2A104KC	CAP , CHIP	0.1UF, 100V	
C848	HCUP2A104KC	CAP , CHIP	0.1UF, 100V	
C849	HCUP2A104KC	CAP , CHIP	0.1UF, 100V	
C850	HCUP2A104KC	CAP , CHIP	0.1UF, 100V	
C855	HCUS1H103KC	CAP , CHIP	0.01UF, 50V	
C856	HCUS1H103KC	CAP , CHIP	0.01UF, 50V	
C857	HCUS1H103KC	CAP , CHIP	0.01UF, 50V	
C858	HCUS1H103KC	CAP , CHIP	0.01UF, 50V	
C861	HCUS1E104ZF	CAP , CHIP	0.1UF ZF	
C862	HCUP2A104KC	CAP , CHIP	0.1UF, 100V	
C863	HCUS1E104ZF	CAP , CHIP	0.1UF ZF	
C864	HCUP2A104KC	CAP , CHIP	0.1UF, 100V	
C866	HCUP1H225ME	CAP , CHIP	2.2UF, 50V	
C867	HCUP1H225ME	CAP , CHIP	2.2UF, 50V	
C868	HCUP2A104KC	CAP , CHIP	0.1UF, 100V	
C869	HCUP2A104KC	CAP , CHIP	0.1UF, 100V	
C870	HCUS1E104ZF	CAP , CHIP	0.1UF ZF	

SEQ.	PART NO.	DESCRIPTION	SPECIFICATION	REMARKS
C871	HCUS1H331JA	CAP , CHIP	330PF, 50V	
C872	HCUS1H331JA	CAP , CHIP	330PF, 50V	
C873	HCUP2A104KC	CAP , CHIP	0.1UF, 100V	
C874	HCUP2A104KC	CAP , CHIP	0.1UF, 100V	
C875	HCUP2A104KC	CAP , CHIP	0.1UF, 100V	
C876	HCUP2A104KC	CAP , CHIP	0.1UF, 100V	
C877	HCUP2A104KC	CAP , CHIP	0.1UF, 100V	
C878	HCUP2A104KC	CAP , CHIP	0.1UF, 100V	
C879	HCUP2A104KC	CAP , CHIP	0.1UF, 100V	
C880	HCUP2A104KC	CAP , CHIP	0.1UF, 100V	
C885	HCUS1H103KC	CAP , CHIP	0.01UF, 50V	
C886	HCUS1H103KC	CAP , CHIP	0.01UF, 50V	
C887	HCUS1H103KC	CAP , CHIP	0.01UF, 50V	
C888	HCUS1H103KC	CAP , CHIP	0.01UF, 50V	
C901	HCUS1H103KC	CAP , CHIP	0.01UF, 50V	
C903	HCUS1H103KC	CAP , CHIP	0.01UF, 50V	
C908	HCUS1E104ZF	CAP , CHIP	0.1UF ZF	
C912	HCUS1H103KC	CAP , CHIP	0.01UF, 50V	
C913	HCUS1H103KC	CAP , CHIP	0.01UF, 50V	
C915	HCUS1H103KC	CAP , CHIP	0.01UF, 50V	
C921	HCUS1E104ZF	CAP , CHIP	0.1UF ZF	
C923	HCUS1E104ZF	CAP , CHIP	0.1UF ZF	
C924	HCUS1E104ZF	CAP , CHIP	0.1UF ZF	
C931	HCUS1H103KC	CAP , CHIP	0.01UF, 50V	
C933	HCUS1H103KC	CAP , CHIP	0.01UF, 50V	
C942	HCUS1E104ZF	CAP , CHIP	0.1UF ZF	
C952	HCUS1E104ZF	CAP , CHIP	0.1UF ZF	
C954	HCUS1E104ZF	CAP , CHIP	0.1UF ZF	
D931	HVDRB160L60TE25	DIODE , SCHOTTKEY BARRIER	RB160L-60TE25	
IC10	HVINJM2068MDTE1	I.C , OPAMP	NJM2068MD-TE1	
IC12	HVINJM2068MDTE1	I.C , OPAMP	NJM2068MD-TE1	
IC15	HVITC9164AF	I.C , FUNCTION	TC9164AF	
IC16	HVINJM2296M	I.C,VIDEOSW	NJM2296M	
IC17	HVINJM2233BV	I.C,VIDEOSW		
IC32	HVIPCM1606E	I.C , D/A CONVERTER		
IC33	HVINJM2068MDTE1	I.C , OP AMP	NJM2068MD-TE1	
IC34	HVINJM2068MDTE1	I.C , OP AMP	NJM2068MD-TE1	
IC35	HVINJM2068MDTE1	I.C , OP AMP	NJM2068MD-TE1	
IC37	HVINJM2068MDTE1	I.C , OP AMP	NJM2068MD-TE1	
IC41	HVI74VHC04MX	I.C , INVERTER	74VHC04M	
IC43	HVINJM2068MDTE1	I.C , OP AMP	NJM2068MD-TE1	
IC47	HVINJM2068MDTE1	I.C , OP AMP	NJM2068MD-TE1	
IC52	HVISN74AHC08DR	I.C , AND GATE	3.5V-5V	
IC53	HVISN74ACT08D	I.C , AND GATE(5V-3.3V)		
IC54	HVISN74ACT08D	I.C , AND GATE(5V-3.3V)		
IC71	BVIMB90F476APFG	IC , FLASH U-COM	FUJITSU	
IC73	HVIRH5VT18C	I.C , RESET		
IC75	HVIDDX8000	I.C ,DIGITAL AUDIO PROCESSOR		
IC91	HVIRC1117ST	I.C , ADJ REGULATOR	RC1117ST	
Q111	HVTKTD1304T	TR , CHIP(MUTE)	KTD1304	

SEQ.	PART NO.	DESCRIPTION	SPECIFICATION	REMARKS
Q112	HVTKTD1304T	TR , CHIP(MUTE)	KTD1304	
Q203	HVTKRC102S	TR , CHIP	KRC102S	
Q204	HVTKTD1304T	TR , CHIP(MUTE)	KTD1304	
Q205	HVTKTD1304T	TR , CHIP(MUTE)	KTD1304	
Q261	HVTKTD1304T	TR , CHIP(MUTE)	KTD1304	
Q262	HVTKTD1304T	TR , CHIP(MUTE)	KTD1304	
Q263	HVTKRA102S	TR , CHIP	KRA102S	
Q271	HVTKRC102S	TR , CHIP	KRC102S	
Q272	HVTKRA102S	TR , CHIP	KRA102S	
Q273	HVTKRC102S	TR , CHIP	KRC102S	
Q340	HVTKRA102S	TR , CHIP	KRA102S	
Q359	HVTKTD1304T	TR , CHIP(MUTE)	KTD1304	
Q708	HVTKRC102S	TR , CHIP	KRC102S	
Q871	HVTKRA102S	TR , CHIP	KRA102S	
Q872	HVTKRC102S	TR , CHIP	KRC102S	
Q952	HVTKRA102S	TR , CHIP	KRA102S	
R101	HRJ10DJ101T	RES , CHIP(1/10W)	100OHM J	
R102	HRJ10DJ101T	RES , CHIP(1/10W)	100OHM J	
R103	HRJ10DJ101T	RES , CHIP(1/10W)	100OHM J	
R104	HRJ10DJ101T	RES , CHIP(1/10W)	100OHM J	
R105	HRJ10DJ820T	RES , CHIP(1/10W)	82OHM J	
R106	HRJ10DJ223T	RES , CHIP(1/10W)	22KOHM J	
R107	HRJ10DJ103T	RES , CHIP(1/10W)	10KOHM J	
R108	HRJ10DJ103T	RES , CHIP(1/10W)	10KOHM J	
R110	HRJ10DJ680T	RES , CHIP(1/10W)	68OHM J	
R111	HRJ10DJ103T	RES , CHIP(1/10W)	10KOHM J	
R119	HRJ10DJ101T	RES , CHIP(1/10W)	100OHM J	
R120	HRJ10DJ101T	RES , CHIP(1/10W)	100OHM J	
R131	HRJ10DJ101T	RES , CHIP(1/10W)	100OHM J	
R132	HRJ10DJ101T	RES , CHIP(1/10W)	100OHM J	
R133	HRJ10DJ101T	RES , CHIP(1/10W)	100OHM J	
R134	HRJ10DJ101T	RES , CHIP(1/10W)	100OHM J	
R135	HRJ10DJ223T	RES , CHIP(1/10W)	22KOHM J	
R138	HRJ10DJ103T	RES , CHIP(1/10W)	10KOHM J	
R139	HRJ10DJ103T	RES , CHIP(1/10W)	10KOHM J	
R141	HRJ10DJ101T	RES , CHIP(1/10W)	100OHM J	
R142	HRJ10DJ101T	RES , CHIP(1/10W)	100OHM J	
R143	HRJ10DJ101T	RES , CHIP(1/10W)	100OHM J	
R144	HRJ10DJ101T	RES , CHIP(1/10W)	100OHM J	
R145	HRJ10DJ911T	RES , CHIP(1/10W)	910OHM J	
R146	HRJ10DJ0R0T	RES , CHIP(1/10W)	0OHM J	
R147	HRJ10DJ223T	RES , CHIP(1/10W)	22KOHM J	
R149	HRJ10DJ102T	RES , CHIP(1/10W)	1KOHM J	
R150	HRJ10DJ103T	RES , CHIP(1/10W)	10KOHM J	
R151	HRJ10DJ0R0T	RES , CHIP(1/10W)	0OHM J	
R152	HRJ10DJ103T	RES , CHIP(1/10W)	10KOHM J	
R155	HRJ10DJ102T	RES , CHIP(1/10W)	1KOHM J	
R156	HRJ10DJ102T	RES , CHIP(1/10W)	1KOHM J	
R160	HRJ10DJ0R0T	RES , CHIP(1/10W)	0OHM J	
R161	HRJ10DJ220T	RES , CHIP(1/10W)	22OHM J	

SEQ.	PART NO.	DESCRIPTION	SPECIFICATION	REMARKS
R162	HRJ10DJ680T	RES , CHIP(1/10W)	68OHM J	
R164	HRJ10DJ680T	RES , CHIP(1/10W)	68OHM J	
R165	HRJ10DJ680T	RES , CHIP(1/10W)	68OHM J	
R166	HRJ10DJ680T	RES , CHIP(1/10W)	68OHM J	
R167	HRJ10DJ220T	RES , CHIP(1/10W)	22OHM J	
R168	HRJ10DJ0R0T	RES , CHIP(1/10W)	0OHM J	
R169	HRJ10DJ750T	RES , CHIP(1/10W)	75OHM J	
R170	HRJ10DJ223T	RES , CHIP(1/10W)	22KOHM J	
R171	HRJ10DJ101T	RES , CHIP(1/10W)	100OHM J	
R172	HRJ10DJ101T	RES , CHIP(1/10W)	100OHM J	
R175	HRJ10DJ104T	RES , CHIP(1/10W)	100KOHM J	
R176	HRJ10DJ104T	RES , CHIP(1/10W)	100KOHM J	
R177	HRJ10DJ103T	RES , CHIP(1/10W)	10KOHM J	
R178	HRJ10DJ103T	RES , CHIP(1/10W)	10KOHM J	
R179	HRJ10DJ471T	RES , CHIP(1/10W)	470OHM J	
R180	HRJ10DJ391T	RES , CHIP(1/10W)	390OHM J	
R181	HRJ10DJ102T	RES , CHIP(1/10W)	1KOHM J	
R182	HRJ10DJ1R0T	RES , CHIP(1/10W)	1OHM J	
R183	HRJ10DJ750T	RES , CHIP(1/10W)	75OHM J	
R184	HRJ10DJ102T	RES , CHIP(1/10W)	1KOHM J	
R185	HRJ10DJ101T	RES , CHIP(1/10W)	100OHM J	
R191	HRJ10DJ223T	RES , CHIP(1/10W)	22KOHM J	
R192	HRJ10DJ103T	RES , CHIP(1/10W)	10KOHM J	
R193	HRJ10DJ680T	RES , CHIP(1/10W)	68OHM J	
R194	HRJ10DJ102T	RES , CHIP(1/10W)	1KOHM J	
R195	HRJ10DJ102T	RES , CHIP(1/10W)	1KOHM J	
R197	HRJ10DJ680T	RES , CHIP(1/10W)	68OHM J	
R198	HRJ10DJ103T	RES , CHIP(1/10W)	10KOHM J	
R199	HRJ10DJ102T	RES , CHIP(1/10W)	1KOHM J	
R200	HRJ10DJ102T	RES , CHIP(1/10W)	1KOHM J	
R201	HRJ10DJ682T	RES , CHIP(1/10W)	6.8KOHM J	
R202	HRJ10DJ682T	RES , CHIP(1/10W)	6.8KOHM J	
R203	HRJ10DJ101T	RES , CHIP(1/10W)	100OHM J	
R204	HRJ10DJ101T	RES , CHIP(1/10W)	100OHM J	
R205	HRJ10DJ104T	RES , CHIP(1/10W)	100KOHM J	
R206	HRJ10DJ104T	RES , CHIP(1/10W)	100KOHM J	
R207	HRJ10DJ104T	RES , CHIP(1/10W)	100KOHM J	
R208	HRJ10DJ101T	RES , CHIP(1/10W)	100OHM J	
R209	HRJ10DJ101T	RES , CHIP(1/10W)	100OHM J	
R210	HRJ10DJ104T	RES , CHIP(1/10W)	100KOHM J	
R211	HRJ10DJ100T	RES , CHIP(1/10W)	10OHM J	
R212	HRJ10DJ561T	RES , CHIP(1/10W)	560OHM J	
R221	HRJ10DJ221T	RES , CHIP(1/10W)	220OHM J	
R222	HRJ10DJ221T	RES , CHIP(1/10W)	220OHM J	
R223	HRJ10DJ561T	RES , CHIP(1/10W)	560OHM J	
R224	HRJ10DJ271T	RES , CHIP(1/10W)	270OHM J	
R225	HRJ10DJ104T	RES , CHIP(1/10W)	100KOHM J	
R226	HRJ10DJ104T	RES , CHIP(1/10W)	100KOHM J	
R231	HRJ10DJ221T	RES , CHIP(1/10W)	220OHM J	
R232	HRJ10DJ221T	RES , CHIP(1/10W)	220OHM J	

SEQ.	PART NO.	DESCRIPTION	SPECIFICATION	REMARKS
R233	HRJ10DJ104T	RES , CHIP(1/10W)	100KOHM J	
R234	HRJ10DJ104T	RES , CHIP(1/10W)	100KOHM J	
R235	HRJ10DJ104T	RES , CHIP(1/10W)	100KOHM J	
R236	HRJ10DJ104T	RES , CHIP(1/10W)	100KOHM J	
R237	HRJ10DJ471T	RES , CHIP(1/10W)	470OHM J	
R238	HRJ10DJ471T	RES , CHIP(1/10W)	470OHM J	
R239	HRJ10DJ104T	RES , CHIP(1/10W)	100KOHM J	
R240	HRJ10DJ104T	RES , CHIP(1/10W)	100KOHM J	
R241	HRJ10DJ471T	RES , CHIP(1/10W)	470OHM J	
R242	HRJ10DJ471T	RES , CHIP(1/10W)	470OHM J	
R243	HRJ10DJ104T	RES , CHIP(1/10W)	100KOHM J	
R244	HRJ10DJ104T	RES , CHIP(1/10W)	100KOHM J	
R251	HRJ10DJ221T	RES , CHIP(1/10W)	220OHM J	
R252	HRJ10DJ221T	RES , CHIP(1/10W)	220OHM J	
R253	HRJ10DJ102T	RES , CHIP(1/10W)	1KOHM J	
R254	HRJ10DJ102T	RES , CHIP(1/10W)	1KOHM J	
R255	HRJ10DJ104T	RES , CHIP(1/10W)	100KOHM J	
R256	HRJ10DJ104T	RES , CHIP(1/10W)	100KOHM J	
R257	HRJ10DJ100T	RES , CHIP(1/10W)	10OHM J	
R258	HRJ10DJ472T	RES , CHIP(1/10W)	4.7KOHM J	
R259	HRJ10DJ100T	RES , CHIP(1/10W)	10OHM J	
R261	HRJ10DJ102T	RES , CHIP(1/10W)	1KOHM J	
R262	HRJ10DJ102T	RES , CHIP(1/10W)	1KOHM J	
R263	HRJ10DJ564T	RES , CHIP(1/10W)	560KOHM J	
R264	HRJ10DJ471T	RES , CHIP(1/10W)	470OHM J	
R272	HRJ10DJ564T	RES , CHIP(1/10W)	560KOHM J	
R273	HRJ10DJ123T	RES , CHIP(1/10W)	12KOHM J	
R274	HRJ10DJ473T	RES , CHIP(1/10W)	47KOHM J	
R275	HRJ10DJ104T	RES , CHIP(1/10W)	100KOHM J	
R281	HRJ10DJ0R0T	RES , CHIP(1/10W)	0OHM J	
R282	HRJ10DJ0R0T	RES , CHIP(1/10W)	0OHM J	
R283	HRJ10DJ104T	RES , CHIP(1/10W)	100KOHM J	
R284	HRJ10DJ104T	RES , CHIP(1/10W)	100KOHM J	
R285	HRJ10DJ0R0T	RES , CHIP(1/10W)	0OHM J	
R286	HRJ10DJ0R0T	RES , CHIP(1/10W)	0OHM J	
R287	HRJ10DJ104T	RES , CHIP(1/10W)	100KOHM J	
R288	HRJ10DJ104T	RES , CHIP(1/10W)	100KOHM J	
R289	HRJ10DJ101T	RES , CHIP(1/10W)	100OHM J	
R290	HRJ10DJ101T	RES , CHIP(1/10W)	100OHM J	
R291	HRJ10DJ101T	RES , CHIP(1/10W)	100OHM J	
R292	HRJ10DJ101T	RES , CHIP(1/10W)	100OHM J	
R301	HRJ10DJ0R0T	RES , CHIP(1/10W)	0OHM J	
R302	HRJ10DJ0R0T	RES , CHIP(1/10W)	0OHM J	
R305	HRJ10DJ0R0T	RES , CHIP(1/10W)	0OHM J	
R306	HRJ10DJ0R0T	RES , CHIP(1/10W)	0OHM J	
R312	HRJ10DJ100T	RES , CHIP(1/10W)	10OHM J	
R313	HRJ10DJ1R0T	RES , CHIP(1/10W)	1OHM J	
R314	HRJ10DJ1R0T	RES , CHIP(1/10W)	1OHM J	
R315	HRJ10DJ1R0T	RES , CHIP(1/10W)	1OHM J	
R316	HRJ10DJ100T	RES , CHIP(1/10W)	10OHM J	

SEQ.	PART NO.	DESCRIPTION	SPECIFICATION	REMARKS
R317	HRJ10DJ100T	RES , CHIP(1/10W)	10OHM J	
R318	HRJ10DJ100T	RES , CHIP(1/10W)	10OHM J	
R319	HRJ10DJ1R0T	RES , CHIP(1/10W)	1OHM J	
R320	HRJ10DJ1R0T	RES , CHIP(1/10W)	1OHM J	
R321	HRJ10DJ471T	RES , CHIP(1/10W)	470OHM J	
R322	HRJ10DJ471T	RES , CHIP(1/10W)	470OHM J	
R323	HRJ10DJ104T	RES , CHIP(1/10W)	100KOHM J	
R324	HRJ10DJ104T	RES , CHIP(1/10W)	100KOHM J	
R325	HRJ10DJ101T	RES , CHIP(1/10W)	100OHM J	
R326	HRJ10DJ101T	RES , CHIP(1/10W)	100OHM J	
R327	HRJ10DJ104T	RES , CHIP(1/10W)	100KOHM J	
R328	HRJ10DJ104T	RES , CHIP(1/10W)	100KOHM J	
R329	HRJ10DJ1R0T	RES , CHIP(1/10W)	1OHM J	
R331	HRJ10DJ122T	RES , CHIP(1/10W)	1.2KOHM J	
R332	HRJ10DJ122T	RES , CHIP(1/10W)	1.2KOHM J	
R333	HRJ10DJ104T	RES , CHIP(1/10W)	100KOHM J	
R334	HRJ10DJ104T	RES , CHIP(1/10W)	100KOHM J	
R335	HRJ10DJ104T	RES , CHIP(1/10W)	100KOHM J	
R336	HRJ10DJ104T	RES , CHIP(1/10W)	100KOHM J	
R337	HRJ10DJ101T	RES , CHIP(1/10W)	100OHM J	
R338	HRJ10DJ101T	RES , CHIP(1/10W)	100OHM J	
R339	HRJ10DJ104T	RES , CHIP(1/10W)	100KOHM J	
R340	HRJ10DJ104T	RES , CHIP(1/10W)	100KOHM J	
R347	HRJ10DJ122T	RES , CHIP(1/10W)	1.2KOHM J	
R348	HRJ10DJ122T	RES , CHIP(1/10W)	1.2KOHM J	
R349	HRJ10DJ0R0T	RES , CHIP(1/10W)	0OHM J	
R351	HRJ10DJ471T	RES , CHIP(1/10W)	470OHM J	
R352	HRJ10DJ471T	RES , CHIP(1/10W)	470OHM J	
R353	HRJ10DJ104T	RES , CHIP(1/10W)	100KOHM J	
R354	HRJ10DJ104T	RES , CHIP(1/10W)	100KOHM J	
R355	HRJ10DJ101T	RES , CHIP(1/10W)	100OHM J	
R356	HRJ10DJ101T	RES , CHIP(1/10W)	100OHM J	
R359	HRJ10DJ0R0T	RES , CHIP(1/10W)	0OHM J	
R361	HRJ10DJ104T	RES , CHIP(1/10W)	100KOHM J	
R362	HRJ10DJ104T	RES , CHIP(1/10W)	100KOHM J	
R363	HRJ10DJ100T	RES , CHIP(1/10W)	10OHM J	
R364	HRJ10DJ100T	RES , CHIP(1/10W)	10OHM J	
R365	HRJ10DJ100T	RES , CHIP(1/10W)	10OHM J	
R371	HRJ10DJ121T	RES , CHIP(1/10W)	120OHM J	
R372	HRJ10DJ121T	RES , CHIP(1/10W)	120OHM J	
R373	HRJ10DJ471T	RES , CHIP(1/10W)	470OHM J	
R374	HRJ10DJ471T	RES , CHIP(1/10W)	470OHM J	
R375	HRJ10DJ104T	RES , CHIP(1/10W)	100KOHM J	
R376	HRJ10DJ104T	RES , CHIP(1/10W)	100KOHM J	
R381	HRJ10DJ271T	RES , CHIP(1/10W)	270OHM J	
R382	HRJ10DJ271T	RES , CHIP(1/10W)	270OHM J	
R383	HRJ10DJ561T	RES , CHIP(1/10W)	560OHM J	
R384	HRJ10DJ561T	RES , CHIP(1/10W)	560OHM J	
R391	HRJ10DJ271T	RES , CHIP(1/10W)	270OHM J	
R393	HRJ10DJ561T	RES , CHIP(1/10W)	560OHM J	

SEQ.	PART NO.	DESCRIPTION	SPECIFICATION	REMARKS
R401	HRJ10DJ271T	RES , CHIP(1/10W)	270OHM J	
R403	HRJ10DJ561T	RES , CHIP(1/10W)	560OHM J	
R405	HRJ10DJ122T	RES , CHIP(1/10W)	1.2KOHM J	
R406	HRJ10DJ122T	RES , CHIP(1/10W)	1.2KOHM J	
R407	HRJ10DJ471T	RES , CHIP(1/10W)	470OHM J	
R408	HRJ10DJ471T	RES , CHIP(1/10W)	470OHM J	
R409	HRJ10DJ104T	RES , CHIP(1/10W)	100KOHM J	
R410	HRJ10DJ104T	RES , CHIP(1/10W)	100KOHM J	
R411	HRJ10DJ100T	RES , CHIP(1/10W)	10OHM J	
R412	HRJ10DJ101T	RES , CHIP(1/10W)	100OHM J	
R413	HRJ10DJ100T	RES , CHIP(1/10W)	10OHM J	
R414	HRJ10DJ0R0T	RES , CHIP(1/10W)	0OHM J	
R415	HRJ10DJ750T	RES , CHIP(1/10W)	75OHM J	
R418	HRJ10DJ104T	RES , CHIP(1/10W)	100KOHM J	
R419	HRJ10DJ104T	RES , CHIP(1/10W)	100KOHM J	
R431	HRJ10DJ221T	RES , CHIP(1/10W)	220OHM J	
R432	HRJ10DJ221T	RES , CHIP(1/10W)	220OHM J	
R433	HRJ10DJ152T	RES , CHIP(1/10W)	1.5KOHM J	
R434	HRJ10DJ152T	RES , CHIP(1/10W)	1.5KOHM J	
R435	HRJ10DJ104T	RES , CHIP(1/10W)	100KOHM J	
R437	HRJ10DJ104T	RES , CHIP(1/10W)	100KOHM J	
R439	HRJ10DJ122T	RES , CHIP(1/10W)	1.2KOHM J	
R441	HRJ10DJ104T	RES , CHIP(1/10W)	100KOHM J	
R451	HRJ10DJ103T	RES , CHIP(1/10W)	10KOHM J	
R452	HRJ10DJ103T	RES , CHIP(1/10W)	10KOHM J	
R453	HRJ10DJ103T	RES , CHIP(1/10W)	10KOHM J	
R456	HRJ10DJ103T	RES , CHIP(1/10W)	10KOHM J	
R457	HRJ10DJ101T	RES , CHIP(1/10W)	100OHM J	
R458	HRJ10DJ101T	RES , CHIP(1/10W)	100OHM J	
R459	HRJ10DJ471T	RES , CHIP(1/10W)	470OHM J	
R460	HRJ10DJ104T	RES , CHIP(1/10W)	100KOHM J	
R471	HRJ10DJ0R0T	RES , CHIP(1/10W)	0OHM J	
R472	HRJ10DJ0R0T	RES , CHIP(1/10W)	0OHM J	
R475	HRJ10DJ122T	RES , CHIP(1/10W)	1.2KOHM J	
R476	HRJ10DJ122T	RES , CHIP(1/10W)	1.2KOHM J	
R477	HRJ10DJ122T	RES , CHIP(1/10W)	1.2KOHM J	
R478	HRJ10DJ122T	RES , CHIP(1/10W)	1.2KOHM J	
R479	HRJ10DJ101T	RES , CHIP(1/10W)	100OHM J	
R480	HRJ10DJ101T	RES , CHIP(1/10W)	100OHM J	
R506	HRJ10DJ123T	RES , CHIP(1/10W)	12KOHM J	
R521	HRJ10DJ100T	RES , CHIP(1/10W)	10OHM J	
R522	HRJ10DJ100T	RES , CHIP(1/10W)	10OHM J	
R531	HRJ10DJ100T	RES , CHIP(1/10W)	10OHM J	
R532	HRJ10DJ102T	RES , CHIP(1/10W)	1KOHM J	
R541	HRJ10DJ100T	RES , CHIP(1/10W)	10OHM J	
R542	HRJ10DJ100T	RES , CHIP(1/10W)	10OHM J	
R543	HRJ10DJ100T	RES , CHIP(1/10W)	10OHM J	
R544	HRJ10DJ100T	RES , CHIP(1/10W)	10OHM J	
R546	HRJ10DJ100T	RES , CHIP(1/10W)	10OHM J	
R547	HRJ10DJ100T	RES , CHIP(1/10W)	10OHM J	

SEQ.	PART NO.	DESCRIPTION	SPECIFICATION	REMARKS
R571	HRJ10DJ100T	RES , CHIP(1/10W)	10OHM J	
R572	HRJ10DJ100T	RES , CHIP(1/10W)	10OHM J	
R573	HRJ10DJ100T	RES , CHIP(1/10W)	10OHM J	
R574	HRJ10DJ100T	RES , CHIP(1/10W)	10OHM J	
R575	HRJ10DJ100T	RES , CHIP(1/10W)	10OHM J	
R576	HRJ10DJ100T	RES , CHIP(1/10W)	10OHM J	
R591	HRJ10DJ100T	RES , CHIP(1/10W)	10OHM J	
R593	HRJ10DJ1R0T	RES , CHIP(1/10W)	1OHM J	
R594	HRJ10DJ1R0T	RES , CHIP(1/10W)	1OHM J	
R595	HRJ10DJ1R0T	RES , CHIP(1/10W)	1OHM J	
R596	HRJ10DJ100T	RES , CHIP(1/10W)	10OHM J	
R597	HRJ10DJ100T	RES , CHIP(1/10W)	10OHM J	
R598	HRJ10DJ100T	RES , CHIP(1/10W)	10OHM J	
R599	HRJ10DJ100T	RES , CHIP(1/10W)	10OHM J	
R600	HRJ10DJ100T	RES , CHIP(1/10W)	10OHM J	
R601	HRJ10DJ100T	RES , CHIP(1/10W)	10OHM J	
R602	HRJ10DJ100T	RES , CHIP(1/10W)	10OHM J	
R603	HRJ10DJ100T	RES , CHIP(1/10W)	10OHM J	
R614	HRJ10DJ100T	RES , CHIP(1/10W)	10OHM J	
R619	HRJ10DJ0R0T	RES , CHIP(1/10W)	0OHM J	
R620	HRJ10DJ0R0T	RES , CHIP(1/10W)	0OHM J	
R621	HRJ10DJ100T	RES , CHIP(1/10W)	10OHM J	
R622	HRJ10DJ100T	RES , CHIP(1/10W)	10OHM J	
R623	HRJ10DJ100T	RES , CHIP(1/10W)	10OHM J	
R624	HRJ10DJ0R0T	RES , CHIP(1/10W)	0OHM J	
R625	HRJ10DJ0R0T	RES , CHIP(1/10W)	0OHM J	
R626	HRJ10DJ0R0T	RES , CHIP(1/10W)	0OHM J	
R631	HRJ10DJ0R0T	RES , CHIP(1/10W)	0OHM J	
R632	HRJ10DJ0R0T	RES , CHIP(1/10W)	0OHM J	
R633	HRJ10DJ0R0T	RES , CHIP(1/10W)	0OHM J	
R634	HRJ10DJ0R0T	RES , CHIP(1/10W)	0OHM J	
R635	HRJ10DJ100T	RES , CHIP(1/10W)	10OHM J	
R636	HRJ10DJ100T	RES , CHIP(1/10W)	10OHM J	
R637	HRJ10DJ100T	RES , CHIP(1/10W)	10OHM J	
R641	HRJ10DJ1R0T	RES , CHIP(1/10W)	1OHM J	
R642	HRJ10DJ100T	RES , CHIP(1/10W)	10OHM J	
R645	HRJ10DJ103T	RES , CHIP(1/10W)	10KOHM J	
R671	HRJ10DJ4R7T	RES , CHIP(1/10W)	4.7OHM J	
R672	HRJ10DJ183T	RES , CHIP(1/10W)	18KOHM J	
R673	HRJ10DJ100T	RES , CHIP(1/10W)	10OHM J	
R674	HRJ10DJ822T	RES , CHIP(1/10W)	8.2KOHM J	
R682	HRJ10DJ103T	RES , CHIP(1/10W)	10KOHM J	
R683	HRJ10DJ103T	RES , CHIP(1/10W)	10KOHM J	
R684	HRJ10DJ100T	RES , CHIP(1/10W)	10OHM J	
R692	HRJ10DJ0R0T	RES , CHIP(1/10W)	0OHM J	
R693	HRJ10DJ103T	RES , CHIP(1/10W)	10KOHM J	
R695	HRJ10DJ103T	RES , CHIP(1/10W)	10KOHM J	
R697	HRJ10DJ103T	RES , CHIP(1/10W)	10KOHM J	
R701	HRJ10DJ103T	RES , CHIP(1/10W)	10KOHM J	
R702	HRJ10DJ103T	RES , CHIP(1/10W)	10KOHM J	

SEQ.	PART NO.	DESCRIPTION	SPECIFICATION	REMARKS
R703	HRJ10DJ103T	RES , CHIP(1/10W)	10KOHM J	
R704	HRJ10DJ103T	RES , CHIP(1/10W)	10KOHM J	
R705	HRJ10DJ102T	RES , CHIP(1/10W)	1KOHM J	
R708	HRJ10DJ332T	RES , CHIP(1/10W)	3.3KOHM J	
R711	HRJ10DJ562T	RES , CHIP(1/10W)	5.6KOHM J	
R714	HRJ10DJ103T	RES , CHIP(1/10W)	10KOHM J	
R715	HRJ10DJ103T	RES , CHIP(1/10W)	10KOHM J	
R716	HRJ10DJ103T	RES , CHIP(1/10W)	10KOHM J	
R721	HRJ10DJ183T	RES , CHIP(1/10W)	18KOHM J	
R722	HRJ10DJ221T	RES , CHIP(1/10W)	220OHM J	
R723	HRJ10DJ4R7T	RES , CHIP(1/10W)	4.7OHM J	
R734	HRJ10DJ102T	RES , CHIP(1/10W)	1KOHM J	
R735	HRJ10DJ102T	RES , CHIP(1/10W)	1KOHM J	
R771	HRJ10DJ682T	RES , CHIP(1/10W)	6.8KOHM J	
R772	HRJ10DJ682T	RES , CHIP(1/10W)	6.8KOHM J	
R786	HRJ10DJ100T	RES , CHIP(1/10W)	10OHM J	
R787	HRJ10DJ100T	RES , CHIP(1/10W)	10OHM J	
R788	HRJ10DJ100T	RES , CHIP(1/10W)	10OHM J	
R789	HCUS1E104ZF	CAP , CHIP	0.1UF ZF	
R792	HRJ10DJ102T	RES , CHIP(1/10W)	1KOHM J	
R801	HRJ10DJ0R0T	RES , CHIP(1/10W)	0OHM J	
R802	HRJ10DJ103T	RES , CHIP(1/10W)	10KOHM J	
R803	HRJ10DJ103T	RES , CHIP(1/10W)	10KOHM J	
R805	HRJ10DJ220T	RES , CHIP(1/10W)	22OHM J	
R806	HRJ10DJ220T	RES , CHIP(1/10W)	22OHM J	
R807	HRJ10DJ220T	RES , CHIP(1/10W)	22OHM J	
R808	HRJ10DJ220T	RES , CHIP(1/10W)	22OHM J	
R815	HRJ10DJ220T	RES , CHIP(1/10W)	22OHM J	
R816	HRJ10DJ220T	RES , CHIP(1/10W)	22OHM J	
R817	HRJ10DJ220T	RES , CHIP(1/10W)	22OHM J	
R818	HRJ10DJ220T	RES , CHIP(1/10W)	22OHM J	
R819	HRJ10DJ220T	RES , CHIP(1/10W)	22OHM J	
R821	HRJ10DJ220T	RES , CHIP(1/10W)	22OHM J	
R822	HRJ10DJ220T	RES , CHIP(1/10W)	22OHM J	
R823	HRJ10DJ220T	RES , CHIP(1/10W)	22OHM J	
R824	HRJ10DJ220T	RES , CHIP(1/10W)	22OHM J	
R826	HRJ10DJ220T	RES , CHIP(1/10W)	22OHM J	
R828	HRJ10DJ220T	RES , CHIP(1/10W)	22OHM J	
R829	HRJ10DJ220T	RES , CHIP(1/10W)	22OHM J	
R831	HRJ10DJ0R0T	RES , CHIP(1/10W)	0OHM J	
R837	HRJ10DJ220T	RES , CHIP(1/10W)	22OHM J	
R838	HRJ10DJ220T	RES , CHIP(1/10W)	22OHM J	
R839	HRJ10DJ220T	RES , CHIP(1/10W)	22OHM J	
R840	HRJ10DJ220T	RES , CHIP(1/10W)	22OHM J	
R845	HRJ10DJ220T	RES , CHIP(1/10W)	22OHM J	
R846	HRJ10DJ220T	RES , CHIP(1/10W)	22OHM J	
R847	HRJ10DJ220T	RES , CHIP(1/10W)	22OHM J	
R848	HRJ10DJ220T	RES , CHIP(1/10W)	22OHM J	
R849	HRJ10DJ220T	RES , CHIP(1/10W)	22OHM J	
R851	HRJ10DJ220T	RES , CHIP(1/10W)	22OHM J	

SEQ.	PART NO.	DESCRIPTION	SPECIFICATION	REMARKS
R853	HRJ10DJ220T	RES , CHIP(1/10W)	22OHM J	
R854	HRJ10DJ220T	RES , CHIP(1/10W)	22OHM J	
R855	HRJ10DJ220T	RES , CHIP(1/10W)	22OHM J	
R856	HRJ10DJ220T	RES , CHIP(1/10W)	22OHM J	
R861	HRJ10DJ0R0T	RES , CHIP(1/10W)	0OHM J	
R863	HRJ10DJ103T	RES , CHIP(1/10W)	10KOHM J	
R870	HRJ10DJ220T	RES , CHIP(1/10W)	22OHM J	
R874	HRJ10DJ220T	RES , CHIP(1/10W)	22OHM J	
R875	HRJ10DJ220T	RES , CHIP(1/10W)	22OHM J	
R876	HRJ10DJ220T	RES , CHIP(1/10W)	22OHM J	
R877	HRJ10DJ220T	RES , CHIP(1/10W)	22OHM J	
R878	HRJ10DJ220T	RES , CHIP(1/10W)	22OHM J	
R879	HRJ10DJ103T	RES , CHIP(1/10W)	10KOHM J	
R882	HRJ10DJ220T	RES , CHIP(1/10W)	22OHM J	
R883	HRJ10DJ220T	RES , CHIP(1/10W)	22OHM J	
R884	HRJ10DJ220T	RES , CHIP(1/10W)	22OHM J	
R885	HRJ10DJ220T	RES , CHIP(1/10W)	22OHM J	
R887	HRJ10DJ220T	RES , CHIP(1/10W)	22OHM J	
R888	HRJ10DJ220T	RES , CHIP(1/10W)	22OHM J	
R889	HRJ10DJ220T	RES , CHIP(1/10W)	22OHM J	
R890	HRJ10DJ220T	RES , CHIP(1/10W)	22OHM J	
R891	HRJ10DJ563T	RES , CHIP(1/10W)	56KOHM J	
R892	HRJ10DJ220T	RES , CHIP(1/10W)	22OHM J	
R893	HRJ10DJ563T	RES , CHIP(1/10W)	56KOHM J	
R894	HRJ10DJ220T	RES , CHIP(1/10W)	22OHM J	
R896	HRJ10DJ220T	RES , CHIP(1/10W)	22OHM J	
R898	HRJ10DJ220T	RES , CHIP(1/10W)	22OHM J	
R906	HRJ10DJ223T	RES , CHIP(1/10W)	22KOHM J	
R907	HRJ10DJ4R7T	RES , CHIP(1/10W)	4.7OHM J	
R908	HRJ10DJ223T	RES , CHIP(1/10W)	22KOHM J	
R915	HRJ10DJ361T	RES , CHIP(1/10W)	360OHM J	
R916	HRJ10DJ221T	RES , CHIP(1/10W)	220OHM J	
R917	HRJ10DJ0R0T	RES , CHIP(1/10W)	0OHM J	
R918	HRJ10DJ0R0T	RES , CHIP(1/10W)	0OHM J	
R921	HRJ10DJ220T	RES , CHIP(1/10W)	22OHM J	
R922	HRJ10DJ101T	RES , CHIP(1/10W)	100OHM J	
R933	HRJ10DJ1R0T	RES , CHIP(1/10W)	1OHM J	
R942	HRJ10DJ103T	RES , CHIP(1/10W)	10KOHM J	
R943	HRJ10DJ222T	RES , CHIP(1/10W)	2.2KOHM J	
R951	HRJ10DJ473T	RES , CHIP(1/10W)	47KOHM J	
R954	HRJ10DJ103T	RES , CHIP(1/10W)	10KOHM J	
R955	HRJ10DJ222T	RES , CHIP(1/10W)	2.2KOHM J	
C103	HCEA1CH100T	CAP , ELECT	10UF16V	
C104	HCEA1CH470T	CAP , ELECT	47UF16V	
C111	HCEA1AH471T	CAP , ELECT	470UF10V	
C123	HCEA1CH470T	CAP , ELECT	47UF16V	
C134	HCEA1CH100T	CAP , ELECT	10UF16V	
C136	HCEA1CH100T	CAP , ELECT	10UF16V	
C146	HCEA1AH471T	CAP , ELECT	470UF10V	
C162	HCEA1AH471T	CAP , ELECT	470UF10V	

SEQ.	PART NO.	DESCRIPTION	SPECIFICATION	REMARKS
C164	HCEA1AH471T	CAP , ELECT	470UF10V	
C167	HCEA1AH221T	CAP , ELECT	220UF10V	
C172	HCEA1AH471T	CAP , ELECT	470UF10V	
C176	HCEA1AH471T	CAP , ELECT	470UF10V	
C177	HCEA1AH471T	CAP , ELECT	470UF10V	
C185	HCEA1CH470T	CAP , ELECT	47UF16V	
C192	HCEA1AH471T	CAP , ELECT	470UF10V	
C197	HCEA1AH471T	CAP , ELECT	470UF10V	
C199	HCEA1AH471T	CAP , ELECT	470UF10V	
C203	HCEA1CH100T	CAP , ELECT	10UF16V	
C205	HCEA1CH100T	CAP , ELECT	10UF16V	
C206	HCEA1CH100T	CAP , ELECT	10UF16V	
C208	HCEA1CH100T	CAP , ELECT	10UF16V	
C237	HCEA1CH100T	CAP , ELECT	10UF16V	
C238	HCEA1CH100T	CAP , ELECT	10UF16V	
C239	HCEA1CH100T	CAP , ELECT	10UF16V	
C240	HCEA1CH100T	CAP , ELECT	10UF16V	
C257	HCEA1CH101T	CAP , ELECT	100UF16V	
C271	HCEA1HH1R0T	CAP , ELECT	1UF50V	
C291	HCEA1CH470T	CAP , ELECT	47UF16V	
C292	HCEA1CH470T	CAP , ELECT	47UF16V	
C321	HCEA1CKS100T	CAP , ELECT	10UF16V	
C322	HCEA1CKS100T	CAP , ELECT	10UF16V	
C325	HCEA1CKS100T	CAP , ELECT	10UF16V	
C326	HCEA1CKS100T	CAP , ELECT	10UF16V	
C331	HCEA1CKS100T	CAP , ELECT	10UF16V	
C332	HCEA1CKS100T	CAP , ELECT	10UF16V	
C339	HCEA1CH100T	CAP , ELECT	10UF16V	
C340	HCEA1CH100T	CAP , ELECT	10UF16V	
C351	HCEA1CH100T	CAP , ELECT	10UF16V	
C352	HCEA1CKS100T	CAP , ELECT	10UF16V	
C355	HCEA1CH100T	CAP , ELECT	10UF16V	
C356	HCEA1CH100T	CAP , ELECT	10UF16V	
C407	HCEA1CH100T	CAP , ELECT	10UF16V	
C408	HCEA1CH100T	CAP , ELECT	10UF16V	
C413	HCEA1CH470T	CAP , ELECT	47UF16V	
C414	HCEA1CH470T	CAP , ELECT	47UF16V	
C440	HCEA1CH100T	CAP , ELECT	10UF16V	
C456	HCEA1CH100T	CAP , ELECT	10UF16V	
C475	HCEA1CH100T	CAP , ELECT	10UF16V	
C476	HCEA1CH100T	CAP , ELECT	10UF16V	
C531	HCEA1CH470T	CAP , ELECT	47UF16V	
C541	HCEA1CH471T	CAP , ELECT	470UF16V	
C641	HCEA0JH102T	CAP , ELECT	1000UF6.3V	
C645	HCEA1CH100T	CAP , ELECT	10UF, 16V	
C647	HCEA0JH102T	CAP , ELECT	1000UF6.3V	
C671	HCEA1CH100T	CAP , ELECT	10UF16V	
C673	HCEA1HH1R0T	CAP , ELECT	1UF50V	
C701	HCEA1HH1R0T	CAP , ELECT	1UF50V	
C721	HCEA1AH221T	CAP , ELECT	220UF10V	

SEQ.	PART NO.	DESCRIPTION	SPECIFICATION	REMARKS
C723	HCEA1HH1R0T	CAP , ELECT	1UF50V	
C821	KCQE1J474KXT	CAP , MYLAR	METALIZED	
C822	KCQE1J474KXT	CAP , MYLAR	METALIZED	
C823	KCFE1J224JBT	CAP , FILM(POLYESTER)	0.22UF63VJ	
C824	KCFE1J224JBT	CAP , FILM(POLYESTER)	0.22UF63VJ	
C851	KCQE1J474KXT	CAP , MYLAR	METALIZED	
C852	KCQE1J474KXT	CAP , MYLAR	METALIZED	
C853	KCFE1J224JBT	CAP , FILM(POLYESTER)	0.22UF63VJ	
C854	KCFE1J224JBT	CAP , FILM(POLYESTER)	0.22UF63VJ	
C881	KCQE1J474KXT	CAP , MYLAR	METALIZED	
C882	KCQE1J474KXT	CAP , MYLAR	METALIZED	
C883	KCFE1J224JBT	CAP , FILM(POLYESTER)	0.22UF63VJ	
C884	KCFE1J224JBT	CAP , FILM(POLYESTER)	0.22UF63VJ	
C902	HCEA1HH101T	CAP , ELECT	100UF, 50V	
C905	HCEA1AH221T	CAP , ELECT	220UF10V	
C911	HCEA1HKS1R0T	CAP , ELECT	1UF50V	
C914	HCEA1CH470T	CAP , ELECT	47UF16V	
C916	HCEA1CKS100T	CAP , ELECT	10UF16V	
C919	HCEA1CKS100T	CAP , ELECT	10UF16V	
C922	HCEA1AH471T	CAP , ELECT	470UF10V	
C925	HCEA1AH471T	CAP , ELECT	470UF10V	
C932	HCEA1AH221T	CAP , ELECT	220UF10V	
C941	HCEA1CH221T	CAP , ELECT	220UF16V	
C951	HCEA1CH101T	CAP , ELECT	100UF16V	
C953	HCEA1CH221T	CAP , ELECT	220UF16V	
D161	HVDMTZJ6.2BT	DIODE , ZENER		
D162	HVDMTZJ6.2BT	DIODE , ZENER		
D263	HVD1SS133MT	DIODE	1SS133T-77	
D264	HVD1SS133MT	DIODE	1SS133T-77	
D641	HVD1SS133MT	DIODE	1SS133T-77	
D642	HVD1SS133MT	DIODE	1SS133T-77	
D811	HVD1SS133MT	DIODE	1SS133T-77	
D841	HVD1SS133MT	DIODE	1SS133T-77	
D871	HVD1SS133MT	DIODE	1SS133T-77	
D908	HVD1SS133MT	DIODE	1SS133T-77	
D913	HVDMTZJ3.3BT	DIODE , ZENER	3.3V1/2W	
D921	HVDMTZJ5.1BT	DIODE , ZENER		
IC74	HVIRE5VL28CATZ	I.C , RESET		
L171	HLQ02C1R8KT	COIL , AXAIL	1.8UH, K	
L173	HLQ02C1R8KT	COIL , AXAIL	1.8UH, K	
L175	HLQ02C1R8KT	COIL , AXAIL	1.8UH, K	
L181	HLQ02C1R8KT	COIL , AXAIL	1.8UH, K	
L182	HLQ02C1R8KT	COIL , AXAIL	1.8UH, K	
L183	HLQ02C1R8KT	COIL , AXAIL	1.8UH, K	
L641	HLQ02C100KT	COIL , AXAIL		
Q101	HVTKSA733CYT	T.R		
Q102	HVTKSA733CYT	T.R		
Q131	HVTKSA733CYT	T.R		
Q132	HVTKSA733CYT	T.R		
Q143	HVTKSA733CYT	T.R		

SEQ.	PART NO.	DESCRIPTION	SPECIFICATION	REMARKS
Q144	HVTKSA733CYT	T.R		
Q184	HVTKSA733CYT	T.R		
Q194	HVTKSA733CYT	T.R		
Q195	HVTKSA733CYT	T.R		
Q912	HVTKSC2316YT	T.R	KSC2316Y	
Q921	HVTKSC2316YT	T.R	KSC2316Y	
Q942	HVTKSD1021YT	T.R		
Q951	HVTKSD1021YT	T.R		
Q954	HVTKSD1021YT	T.R		
R227	CRD20TJ220T	RES , CARBON	22OHM1/5WJ	
R811	CRD20TJ220T	RES , CARBON	22OHM1/5WJ	
R812	CRD20TJ220T	RES , CARBON	22OHM1/5WJ	
R841	CRD20TJ220T	RES , CARBON	22OHM1/5WJ	
R842	CRD20TJ220T	RES , CARBON	22OHM1/5WJ	
R871	CRD20TJ220T	RES , CARBON	22OHM1/5WJ	
R872	CRD20TJ220T	RES , CARBON	22OHM1/5WJ	
R903	CRD20TJ1R0T	RES , CARBON	1OHM1/5WJ	
R905	CRD20TJ1R0T	RES , CARBON	1OHM1/5WJ	
R909	CRD20TJ1R0T	RES , CARBON	1OHM1/5WJ	
R911	CRD20TJ563T	RES , CARBON	56KOHM1/5WJ	
R912	CRD20TJ103T	RES , CARBON	10KOHM1/5WJ	
R941	CRD20TJ102T	RES , CARBON	1KOHM1/5WJ	
R952	CRD20TJ222T	RES , CARBON	2.2KOHM1/5WJ	
R953	CRD20TJ222T	RES , CARBON	2.2KOHM1/5WJ	
S101	HST1A016Z	SW , TACT	SKQNAED010	
	CMY1A204	SINK , HEAT	ADVR-7100	
	CTB3+10J	SCREW		
	CWZQDR7100CN66	WIRE ASS'Y	QDR-7100CC	
BN57	CWB1A907100NE	ASS'YCONNECTOR	7PIN	
BN91	CWB1E910150MD	WIRE ASS'Y	ADVR7100ULCC	
BN92	CWB1B911150NE	WIRE ASS'Y		
BN95	CWB1B906230NE	WIRE ASS'Y		
BN98	CWB1C903200MD	WIRE ASS'Y		
CN21	KJP15GA117ZG	WAFER , CARD CABLE	15P1M/MS/T	
CN41	KJP05GA19ZM	WAFER	MOLEX53014-0510	
CN51	KJP13GA115ZG	WAFER , CARD CABLE	GF120-13S-TS	
CN59	KJP32GA117ZG	WAFER , CARD CABLE	GF102-32S-TS	
CN62	KJP13GA117ZG	WAFER , CARD CABLE	GF102-13S-TS	
CN63	KJP25GA117ZG	WAFER , CARD CABLE	GF102-25S-TS	
CN65	KJP02GA19ZM	WAFER		
CN66	KJP02GA19ZM	WAFER		
CN67	KJP02GA19ZM	WAFER		
CN71	KJP06GA19ZM	WAFER	MOLEX53014-0610	
CN93	KJP04GA01ZM	WAFER	MOLEX5267-04A	
CN97	KJP08GA98ZM	WAFER	MOLEX35336-0810	
CN98	KJP03GA01ZM	WAFER	MOLEX5267-03A	
C101	HCEA1CH100T	CAP , ELECT	10UF16V	
C102	HCEA1CH100T	CAP , ELECT	10UF16V	
C145	HCEA1AH471T	CAP , ELECT	470UF10V	
C174	HCEA1AH471T	CAP , ELECT	470UF10V	

SEQ.	PART NO.	DESCRIPTION	SPECIFICATION	REMARKS
C178	HCEA1AH471T	CAP , ELECT	470UF10V	
C183	HCEA1AH471T	CAP , ELECT	470UF10V	
C643	BCES0HD104	CAP , GOLD	EECS0HD104V	
C805	CCEA1HH102E	CAP , ELECT	1000UF/50V	
C835	CCEA1HH102E	CAP , ELECT	1000UF/50V	
C865	CCEA1HH102E	CAP , ELECT	1000UF/50V	
IC80	HVIDDX2100	I.C , DIGITAL AMP		
IC83	HVIDDX2100	I.C , DIGITAL AMP		
IC86	HVIDDX2100	I.C , DIGITAL AMP		
IC90	HVINJM7805FA	I.C	NJM7805FA	
JK10	CJJ4R036Z	JACK , BOARD(6P)		
JK13	CJJ9N004Z	JACK , (S-VIDEO+VHS)		
JK14	CJJ4M037Z	JACK , BOARD	S-440AE	
JK15	KJP21GA118ZP	SCART CONNECTOR		
JK25	HJS9L001Z	MODULE , OPTICAL	TOTX178	
JK41	HJSTORX179	MODULE , OPTICAL(RECEIVE)	TORX179	
JK42	CJJ4M043Y	JACK , BOARD	ORANGE,SILVER,F	
JK81	CJJ5P014Z	TERMINAL , SPEAKER(4P)	PTB-408SA	
JK82	CJJ5Q010Y	TERMINAL , SPEAKER(8P)		
L811	CLZ9Z013Z	COIL , SPEAKER		
L812	CLZ9Z013Z	COIL , SPEAKER		
L813	CLZ9Z013Z	COIL , SPEAKER		
L814	CLZ9Z013Z	COIL , SPEAKER		
L841	CLZ9Z013Z	COIL , SPEAKER		
L842	CLZ9Z013Z	COIL , SPEAKER		
L843	CLZ9Z013Z	COIL , SPEAKER		
L844	CLZ9Z013Z	COIL , SPEAKER		
L871	CLZ9Z013Z	COIL , SPEAKER		
L872	CLZ9Z013Z	COIL , SPEAKER		
L873	CLZ9Z013Z	COIL , SPEAKER		
L874	CLZ9Z013Z	COIL , SPEAKER		
Q941	HVTKSB1151Y	T.R	KSB1151Y	
Q953	HVTKSB1151Y	T.R	KSB1151Y	
RY81	HSL4A004ZU	RELAY	OSA-SS-212DM3	
RY84	HSL4A004ZU	RELAY	OSA-SS-212DM3	
RY87	HSL4A004ZU	RELAY	OSA-SS-212DM3	
R901	CRG2ANJ470H	RES , METAL OXIDE FILM	470OHM2W	
R902	CRG2ANJ470H	RES , METAL OXIDE FILM	470OHM2W	
R913	KRQ1AJR15H	RES , FUSE	0.15OHM,1WJ	
X712	HOX04194E120TF	CRYSTAL , OSC	HC-49/S(ATS)	

SEQ.	PART NO.	DESCRIPTION	SPECIFICATION	REMARKS
	COP11573C	**POWER PCB ASS'Y**	QDR-7100CC	
	CIP11573C	**POWER PCB AUTO ASS'Y**	QDR-7100CC	
	CUP11573Z	**PCB , POWER**	ADV R-7100	
	KJCFC5S	**HOLDER , FUSE**		
C902	CCKT1H103ZF	CAP , CERAMIC	0.01UF, 50V ZF	
C903	CCKT1H103ZF	CAP , CERAMIC	0.01UF, 50V ZF	
C904	CCKT1H103ZF	CAP , CERAMIC	0.01UF, 50V ZF	
C905	CCKT1H103ZF	CAP , CERAMIC	0.01UF, 50V ZF	
C906	CCKT1H103ZF	CAP , CERAMIC	0.01UF, 50V ZF	
C907	CCKT1H103ZF	CAP , CERAMIC	0.01UF, 50V ZF	
C908	CCKT1H473ZF	CAP , CERAMIC	0.047UF, 50V ZF	
C909	CCKT1H473ZF	CAP , CERAMIC	0.047UF, 50V ZF	
C910	CCKT1H103ZF	CAP , CERAMIC	0.01UF, 50V ZF	
C911	CCKT1H103ZF	CAP , CERAMIC	0.01UF, 50V ZF	
C912	CCKT1H103ZF	CAP , CERAMIC	0.01UF, 50V ZF	
C913	CCKT1H103ZF	CAP , CERAMIC	0.01UF, 50V ZF	
C914	HCEA1HH470T	CAP , ELECT	47UF, 50V	
C915	HCEA1VH101T	CAP , ELECT	100UF, 35V	
C916	HCEA1HH470T	CAP , ELECT	47UF, 50V	
C917	CCKT1H103ZF	CAP , CERAMIC	0.01UF, 50V ZF	
C932	HCEA1HH100T	CAP , ELECT	10UF, 50V	
C935	HCEA1CH471T	CAP , ELECT	470UF, 16V	
C936	HCEA1CH471T	CAP , ELECT	470UF, 16V	
C937	CCKT1H103ZF	CAP , CERAMIC	0.01UF, 50V ZF	
C938	CCKT1H103ZF	CAP , CERAMIC	0.01UF, 50V ZF	
C941	HCEA1AH471T	CAP , ELECT	470UF, 10V	
C945	HCEA0JH102T	CAP , ELECT	1000UF, 6.3V	
C947	HCEA1AH471T	CAP , ELECT	470UF, 10V	
C948	HCEA1CH101T	CAP , ELECT	100UF, 16V	
C949	HCEA1CH220T	CAP , ELECT	22UF, 16V	
C951	HCEA1CH101T	CAP , ELECT	100UF, 16V	
C952	HCEA1HH220T	CAP , ELECT	22UF, 50V	
C953	HCEA1HH470T	CAP , ELECT	47UF, 50V	
C955	HCEA1CH101T	CAP , ELECT	100UF, 16V	
C956	HCEA0JH102T	CAP , ELECT	1000UF, 6.3V	
C957	HCEA1CH101T	CAP , ELECT	100UF, 16V	
C958	HCEA1CH471T	CAP , ELECT	470UF, 16V	
C959	CCEA1VH331T	CAP , ELECT	330UF, , 35V	
D901	KVD1N4003ST	DIODE	1N4003	
D902	KVD1N4003ST	DIODE	1N4003	
D903	KVD1N4003ST	DIODE	1N4003	
D904	KVD1N4003ST	DIODE	1N4003	
D905	KVD1N4003ST	DIODE	1N4003	
D906	KVD1N4003ST	DIODE	1N4003	
D909	KVD1N4003ST	DIODE	1N4003	
D910	KVD1N4003ST	DIODE	1N4003	
D913	KVD1N4003ST	DIODE	1N4003	
D914	KVD1N4003ST	DIODE	1N4003	
D915	KVD1N4003ST	DIODE	1N4003	
D916	C3A206	WIRE , COPPER	SN95/PB5,0.6	

SEQ.	PART NO.	DESCRIPTION	SPECIFICATION	REMARKS
D918	KVD1N4003ST	DIODE	1N4003	
D920	HVD1SS133MT	DIODE	1SS133T-77	
D930	HVDMTZJ2.7BT	DIODE , ZENER		
D931	HVDMTZJ9.1BT	DIODE , ZENER		
D932	HVDMTZJ33BT	DIODE , ZENER	33V 1/2W	
J901	C3A206	WIRE , COPPER	SN95/PB5,0.6	
J902	C3A206	WIRE , COPPER	SN95/PB5,0.6	
J903	C3A206	WIRE , COPPER	SN95/PB5,0.6	
J904	C3A206	WIRE , COPPER	SN95/PB5,0.6	
J905	C3A206	WIRE , COPPER	SN95/PB5,0.6	
J906	C3A206	WIRE , COPPER	SN95/PB5,0.6	
J907	C3A206	WIRE , COPPER	SN95/PB5,0.6	
J908	C3A206	WIRE , COPPER	SN95/PB5,0.6	
J909	C3A206	WIRE , COPPER	SN95/PB5,0.6	
J910	C3A206	WIRE , COPPER	SN95/PB5,0.6	
J911	C3A206	WIRE , COPPER	SN95/PB5,0.6	
J912	C3A206	WIRE , COPPER	SN95/PB5,0.6	
J913	C3A206	WIRE , COPPER	SN95/PB5,0.6	
J914	C3A206	WIRE , COPPER	SN95/PB5,0.6	
J915	C3A206	WIRE , COPPER	SN95/PB5,0.6	
J916	C3A206	WIRE , COPPER	SN95/PB5,0.6	
J917	C3A206	WIRE , COPPER	SN95/PB5,0.6	
J918	C3A206	WIRE , COPPER	SN95/PB5,0.6	
J919	C3A206	WIRE , COPPER	SN95/PB5,0.6	
J920	C3A206	WIRE , COPPER	SN95/PB5,0.6	
J921	C3A206	WIRE , COPPER	SN95/PB5,0.6	
J922	C3A206	WIRE , COPPER	SN95/PB5,0.6	
J923	C3A206	WIRE , COPPER	SN95/PB5,0.6	
J924	C3A206	WIRE , COPPER	SN95/PB5,0.6	
J925	C3A206	WIRE , COPPER	SN95/PB5,0.6	
J926	C3A206	WIRE , COPPER	SN95/PB5,0.6	
J927	C3A206	WIRE , COPPER	SN95/PB5,0.6	
J928	C3A206	WIRE , COPPER	SN95/PB5,0.6	
J930	C3A206	WIRE , COPPER	SN95/PB5,0.6	
J931	C3A206	WIRE , COPPER	SN95/PB5,0.6	
J933	C3A206	WIRE , COPPER	SN95/PB5,0.6	
J934	C3A206	WIRE , COPPER	SN95/PB5,0.6	
J942	C3A206	WIRE , COPPER	SN95/PB5,0.6	
J943	C3A206	WIRE , COPPER	SN95/PB5,0.6	
J944	C3A206	WIRE , COPPER	SN95/PB5,0.6	
J947	C3A206	WIRE , COPPER	SN95/PB5,0.6	
J948	C3A206	WIRE , COPPER	SN95/PB5,0.6	
J949	C3A206	WIRE , COPPER	SN95/PB5,0.6	
J951	C3A206	WIRE , COPPER	SN95/PB5,0.6	
J952	C3A206	WIRE , COPPER	SN95/PB5,0.6	
J955	C3A206	WIRE , COPPER	SN95/PB5,0.6	
J956	C3A206	WIRE , COPPER	SN95/PB5,0.6	
J957	C3A206	WIRE , COPPER	SN95/PB5,0.6	
J960	C3A206	WIRE , COPPER	SN95/PB5,0.6	
J961	C3A206	WIRE , COPPER	SN95/PB5,0.6	

SEQ.	PART NO.	DESCRIPTION	SPECIFICATION	REMARKS
J962	C3A206	WIRE , COPPER	SN95/PB5,0.6	
J963	C3A206	WIRE , COPPER	SN95/PB5,0.6	
J964	C3A206	WIRE , COPPER	SN95/PB5,0.6	
J965	C3A206	WIRE , COPPER	SN95/PB5,0.6	
J966	C3A206	WIRE , COPPER	SN95/PB5,0.6	
J967	C3A206	WIRE , COPPER	SN95/PB5,0.6	
J968	C3A206	WIRE , COPPER	SN95/PB5,0.6	
J969	C3A206	WIRE , COPPER	SN95/PB5,0.6	
J970	C3A206	WIRE , COPPER	SN95/PB5,0.6	
J971	C3A206	WIRE , COPPER	SN95/PB5,0.6	
J973	C3A206	WIRE , COPPER	SN95/PB5,0.6	
J974	C3A206	WIRE , COPPER	SN95/PB5,0.6	
Q940	HVTKTA1271YT	T.R	KTA1271Y	
Q941	HVTKRC107MT	T.R	KRC107M	
Q942	HVTKRA107MT	T.R	KRA107M	
R914	CRD20TJ101T	RES , CARBON	100OHM 1/5W J	
R915	CRD20TJ470T	RES , CARBON	47OHM 1/5W J	
R916	CRD20TJ473T	RES , CARBON	47KOHM 1/5W J	
R931	C3A206	WIRE , COPPER	SN95/PB5,0.6	
R932	CRD25TJ473T	RES , CARBON	47KOHM 1/4W J	
R933	CRD25TJ332T	RES , CARBON	3.3KOHM 1/4W J	
R934	CRD25TJ101T	RES , CARBON	100OHM 1/4W J	
R935	CRD20TJ473T	RES , CARBON	47KOHM 1/5W J	
R936	CRD20TJ104T	RES , CARBON	100KOHM 1/5W J	
R937	CRD25TJ153T	RES , CARBON	15KOHM 1/4W J	
R938	C3A206	WIRE , COPPER	SN95/PB5,0.6	
R939	CRD20TJ473T	RES , CARBON	47KOHM 1/5W J	
R940	CRD25TJ332T	RES , CARBON	3.3KOHM 1/4W J	
R941	CRD20TJ473T	RES , CARBON	47KOHM 1/5W J	
R942	CRD20TJ103T	RES , CARBON	10KOHM 1/5W J	
R943	CRD20TJ473T	RES , CARBON	47KOHM 1/5W J	
R944	CRD20TJ560T	RES , CARBON	56OHM 1/5W J	
R945	CRD20TJ473T	RES , CARBON	47KOHM 1/5W J	
R946	CRD20TJ332T	RES , CARBON	3.3KOHM 1/5W J	
R948	CRD20TJ470T	RES , CARBON	47OHM 1/5W J	
	CMY2A210	HEAT SINK		
	CTB3+8J	SCREW		
	C8ESM800	FLUX		
	H2K31161	SOLDER , WIRE	SN60/PH40	
	H2K50301	SOLDER , BAR	S63S-W 3.0	
BN97	CWB1E912300MD	WIRE ASS'Y		
BN98	CWB1B910220NE	WIRE ASS'Y		
CN91	KJP10GA01ZM	WAFER	MOLEX5267-10A	
CN92	KJP11GA19ZM	WAFER	MOLEX-53014	
CN94	KJP02GA01ZM	WAFER	MOLEX5267-02A	
CN95	KJP06GA19ZM	WAFER	MOLEX53014-0610	
CN96	KJP03GA01ZM	WAFER	MOLEX5267-03A	
CN97	KJP12GA01ZM	WAFER		
CN98	KJP10GA19ZM	WAFER		
CN99	KJP02GB141ZY	WAFER		

SEQ.	PART NO.	DESCRIPTION	SPECIFICATION	REMARKS
C901	KCKDKS472ME	CAP , CERAMIC(X1/Y2/SC)	0.0047UF, /2.5KV	
C931	HCEA1EH222E	CAP , ELECT	2200UF, 25V	
C933	HCEA1EH222E	CAP , ELECT	2200UF, 25V	
C934	HCEA1EH102E	CAP , ELECT	1000UF, 25V	
C939	CCET50VFHS103ND	CAP , ELECT	10000UF, /50V	
C940	HCEA1CH682E	CAP , ELECT	6800UF, 16V	
C942	HCEA1CH222E	CAP , ELECT	2200UF, 16V	
C946	CCEA1CH472E	CAP , ELECT	4700UF, , 16V	
C950	CCEA1JH471E	CAP , ELECT	470UF, , 63V	
D907	HVD2A04H	RECT , DIODE(2A)		
D908	HVD2A04H	RECT , DIODE(2A)		
D911	HVD2A04H	RECT , DIODE(2A)		
D912	HVD2A04H	RECT , DIODE(2A)		
D939	HVD1N5402H	RECT , DIODE(3A)		
D940	CMY1A138YA	HEAT SINK ASS'Y		
	BVDGBJ804	DIODE , BRIDGE	GBJ804	
	CMY1A138	HEAT SINK , DIODE		
	CTB3+10J	SCREW		
	K8AYG6260	COMPOUND , SILICONE		
ET01	CNE75	PLATE , EARTH		
IC91	HVIKIA278R12PI	REGULATOR(12V LOW DROP)	KIA278R12PI	
IC92	HVIMC7812C	I.C , REGULATOR	KA7812-ABTU	
IC93	HVINJM7912FA	I.C , REGULATOR		
IC94	HVIKIA278R06PI	REGULATOR(6V LOW DROP)	KIA278R06	
IC95	HVIKIA78R05PI	REGULATOR(5V LOW DROP)	KIA78R05PI	
IC96	HVIKIA278R06PI	REGULATOR(6V LOW DROP)	KIA278R06	
IC97	CVIMC7809CZA	I.C ASS'Y		
	CMY1A025	HEAT SINK		
	CTB3+8J	SCREW		
	HVIMC7809C	I.C , REGULATOR		
	K8AYG6260	COMPOUND , SILICONE		
IC98	HVIMC7812C	I.C , REGULATOR	KA7812-ABTU	
JW11	CWE4202050AS	WIRE ASS`Y		
JW13	CWE7215200VV	WIRE ASS'Y		
R902	KRQ1AJR47H	RES , FUSE	0.47OHM 1W J	
R903	KRQ1AJR47H	RES , FUSE	0.47OHM 1W J	
R904	KRQ1AJR47H	RES , FUSE	0.47OHM 1W J	
R905	KRQ1AJR47H	RES , FUSE	0.47OHM 1W J	
R906	KRQ1AJR47H	RES , FUSE	0.47OHM 1W J	
R907	KRQ1AJR15H	RES , FUSE	0.15OHM ,1W J	
R908	KRQ1AJR15H	RES , FUSE	0.15OHM ,1W J	
R909	KRQ1AJR47H	RES , FUSE	0.47OHM 1W J	
R910	KRQ1AJR47H	RES , FUSE	0.47OHM 1W J	
R911	KRQ1AJR47H	RES , FUSE	0.47OHM 1W J	
R912	KRQ1AJR15H	RES , FUSE	0.15OHM ,1W J	
R913	KRQ1AJR15H	RES , FUSE	0.15OHM ,1W J	

■ VCR PART

SEQ.	PART NO.	DESCRIPTION	SPECIFICTION	REMARKS
	COP11575C	**VCR MAIN PCB ASS'Y (EUR)**	QDR-7100C	
	CIP11575C	**VCR MAIN PCB AUTO ASS'Y (EUR)**	QDR-7100C	
	CUP11575Z	**PCB , VCR MAIN**		
C301	HCQI1H223JZT	CAP , MYLAR	0.022UF 50V	
C302	HCQI1H223JZT	CAP , MYLAR	0.022UF 50V	
C303	HCBS1H104ZFT	CAP , CERAMIC	0.1UF 50V	
C304	HCEA1CKS470T	CAP , ELECT		
C305	HCEA1HKS1R0T	CAP , ELECT		
C306	HCBS1H220JT	CAP , CERAMIC		
C307	HCBS1H220JT	CAP , CERAMIC		
C308	HCBS1H180JT	CAP , CERAMIC		
C309	HCBS1H180JT	CAP , CERAMIC		
C310	HCBS1H104ZFT	CAP , CERAMIC	0.1UF 50V	
C311	HCEA1CKS470T	CAP , ELECT		
C312	HCEA1CKS101T	CAP , ELECT		
C313	HCBS1H103ZFT	CAP , CERAMIC	0.01UF 50V	
C314	HCBS1H103ZFT	CAP , CERAMIC	0.01UF 50V	
C315	HCBS1C222MXT	CAP , CERAMIC	2200PF 16V	
C316	HCBS1H102KBT	CAP , CERAMIC	1000PF 50V	
C317	HCEA1HKS1R0T	CAP , ELECT		
C319	HCBS1H103ZFT	CAP , CERAMIC	0.01UF 50V	
C320	HCBS1H391KBT	CAP , CERAMIC		
C321	CCEA1HKS100T	CAP , ELECT	10UF 50V	
C322	HCBS1C122MXT	CAP , CERAMIC	1200PF 16V	
C323	HCEA1HKS1R0T	CAP , ELECT		
C324	HCBS1H180JT	CAP , CERAMIC		
C325	HCBS1H180JT	CAP , CERAMIC		
C326	HCBS1H103ZFT	CAP , CERAMIC	0.01UF 50V	
C329	HCBS1H103ZFT	CAP , CERAMIC	0.01UF 50V	
C330	HCBS1H104ZFT	CAP , CERAMIC	0.1UF 50V	
C331	HCBS1H103ZFT	CAP , CERAMIC	0.01UF 50V	
C332	HCBS1H103ZFT	CAP , CERAMIC	0.01UF 50V	
C333	HCBS1H103ZFT	CAP , CERAMIC	0.01UF 50V	
C334	HCBS1H103ZFT	CAP , CERAMIC	0.01UF 50V	
C335	HCEA1EH331T	CAP , ELECT		
C336	HCBS1H103ZFT	CAP , CERAMIC	0.01UF 50V	
C337	HCBS1H103ZFT	CAP , CERAMIC	0.01UF 50V	
C338	HCBS1H103ZFT	CAP , CERAMIC	0.01UF 50V	
C339	HCBS1H103ZFT	CAP , CERAMIC	0.01UF 50V	
C340	HCBS1H181KBT	CAP , CERAMIC	180PF 50V	
C341	HCBS1H561KBT	CAP , CERAMIC		
C342	HCBS1H104ZFT	CAP , CERAMIC	0.1UF 50V	
C343	HCBS1H102KBT	CAP , CERAMIC	1000PF 50V	
C344	HCBS1H103ZFT	CAP , CERAMIC	0.01UF 50V	
C345	HCBS1H103ZFT	CAP , CERAMIC	0.01UF 50V	
C346	HCBS1H103ZFT	CAP , CERAMIC	0.01UF 50V	
C347	HCBS1H104ZFT	CAP , CERAMIC	0.1UF 50V	
C348	HCEA1CKS101T	CAP , ELECT		

SEQ.	PART NO.	DESCRIPTION	SPECIFICTION	REMARKS
C349	HCBS1H471KBT	CAP , CERAMIC		
C350	HCEA1CKS101T	CAP , ELECT		
C351	HCEA1CH470T	CAP , ELECT		
C401	HCBS1H103ZFT	CAP , CERAMIC	0.01UF 50V	
C402	HCEA1HH1R0T	CAP , ELECT	1UF 50V	
C403	HCBS1C222MXT	CAP , CERAMIC	2200PF 16V	
C404	HCBS1H821KBT	CAP , CERAMIC	820PF 50V	
C405	HCEA1HH4R7T	CAP , ELECT	4.7UF 50V	
C406	HCBS1H104ZFT	CAP , CERAMIC	0.1UF 50V	
C407	HCBS1H473ZFT	CAP , CERAMIC	0.047UF 50V	
C408	HCEA1HKS1R0T	CAP , ELECT		
C409	HCBS1H103ZFT	CAP , CERAMIC	0.01UF 50V	
C410	HCEA1CH470T	CAP , ELECT		
C411	HCBS1H103ZFT	CAP , CERAMIC	0.01UF 50V	
C412	HCBS1H270JT	CAP , CERAMIC		
C414	HCBS1H331KBT	CAP , CERAMIC	330PF 50V	
C415	HCEA1HKS1R0T	CAP , ELECT		
C416	HCBS1H470JT	CAP , CERAMIC	47PF 50V	
C417	CCKT1H101KB	CAP , CERAMIC	100PF 50V	
C418	CCKT1H101KB	CAP , CERAMIC	100PF 50V	
C419	CCEA1HKS100T	CAP , ELECT	10UF 50V	
C420	CCEA1HKS100T	CAP , ELECT	10UF 50V	
C421	HCEA1HKS1R0T	CAP , ELECT		
C422	HCBS1H103ZFT	CAP , CERAMIC	0.01UF 50V	
C423	HCBS1H104ZFT	CAP , CERAMIC	0.1UF 50V	
C424	HCBS1H104ZFT	CAP , CERAMIC	0.1UF 50V	
C425	HCBS1H104ZFT	CAP , CERAMIC	0.1UF 50V	
C426	HCEA1CKS470T	CAP , ELECT		
C427	HCEA1CKS470T	CAP , ELECT		
C428	HCBS1H103ZFT	CAP , CERAMIC	0.01UF 50V	
C429	HCEA1HKS1R0T	CAP , ELECT		
C430	CCEA1HKS100T	CAP , ELECT	10UF 50V	
C431	HCEA1HKS1R0T	CAP , ELECT		
C432	HCBS1H103ZFT	CAP , CERAMIC	0.01UF 50V	
C433	HCBS1H103ZFT	CAP , CERAMIC	0.01UF 50V	
C434	HCBS1H103ZFT	CAP , CERAMIC	0.01UF 50V	
C435	HCBS1H103ZFT	CAP , CERAMIC	0.01UF 50V	
C436	HCBS1H103ZFT	CAP , CERAMIC	0.01UF 50V	
C437	HCEA1HKS1R0T	CAP , ELECT		
C438	HCBS1H103ZFT	CAP , CERAMIC	0.01UF 50V	
C439	HCEA1HKS1R0T	CAP , ELECT		
C440	HCBS1H473ZFT	CAP , CERAMIC	0.047UF 50V	
C441	HCEA1CKS470T	CAP , ELECT		
C442	HCBS1H103ZFT	CAP , CERAMIC	0.01UF 50V	
C443	HCBS1H103ZFT	CAP , CERAMIC	0.01UF 50V	
C444	HCEA1CKS470T	CAP , ELECT		
C445	HCEA1HKS1R0T	CAP , ELECT		
C446	HCBS1H223ZFT	CAP , CERAMIC	0.022UF 50V	
C447	HCEA1AKS101T	CAP , ELECT	100UF 10V	
C448	HCBS1H473ZFT	CAP , CERAMIC	0.047UF 50V	

SEQ.	PART NO.	DESCRIPTION	SPECIFICTION	REMARKS
C449	HCBS1H103ZFT	CAP , CERAMIC	0.01UF 50V	
C450	HCEA1CKS470T	CAP , ELECT		
C451	HCBS1H104ZFT	CAP , CERAMIC	0.1UF 50V	
C452	HCEA1CKS220T	CAP , ELECT		
C454	CCEA1EKS330T	CAP , ELECT	33UF 25V	
C455	HCBS1H103ZFT	CAP , CERAMIC	0.01UF 50V	
C456	CCEA0JKS221T	CAP , ELECT	220UF 3V	
C457	HCEA1HKS1R0T	CAP , ELECT		
C458	HCEA1HH4R7T	CAP , ELECT	4.7UF 50V	
C459	HCBS1H104ZFT	CAP , CERAMIC	0.1UF 50V	
C460	HCQI1H104JZT	CAP , MYLAR	0.1UF 50V	
C461	HCBS1H102KBT	CAP , CERAMIC	1000PF 50V	
C462	HCBS1H223ZFT	CAP , CERAMIC	0.022UF 50V	
C463	HCQI1H562JZT	CAP , MYLAR	5600PF 50V	
C464	HCQI1H822JZT	CAP , MYLAR	8200PF 50V	
C465	HCQI1H153JZT	CAP , MYLAR	0.015UF 50V	
C466	KCCT1H510J	CAP , CERAMIC	51PF 50V	
C467	KCCT1H510J	CAP , CERAMIC	51PF 50V	
C468	HCBS1H223ZFT	CAP , CERAMIC	0.022UF 50V	
C469	HCBS1H680JT	CAP , CERAMIC		
C471	HCBS1H104ZFT	CAP , CERAMIC	0.1UF 50V	
C472	HCBS1H103ZFT	CAP , CERAMIC	0.01UF 50V	
C479	HCBS1H103ZFT	CAP , CERAMIC	0.01UF 50V	
C482	HCBS1H330JT	CAP , CERAMIC		
C483	HCBS1H330JT	CAP , CERAMIC		
C484	HCBS1H102KBT	CAP , CERAMIC	1000PF 50V	
C485	HCBS1H223ZFT	CAP , CERAMIC	0.022UF 50V	
C486	HCBS1H330JT	CAP , CERAMIC		
C487	HCBS1H330JT	CAP , CERAMIC		
C488	HCBS1H102KBT	CAP , CERAMIC	1000PF 50V	
C506	HCEA1CKS470T	CAP , ELECT		
C516	HCQI1H223JZT	CAP , MYLAR	0.022UF 50V	
C517	HCEA1CH470T	CAP , ELECT		
C518	HCQI1H123JZT	CAP , MYLAR	0.012UF 50V	
C519	HCQI1H333JZT	CAP , MYLAR	0.033UF 50V	
C520	HCEA1CH470T	CAP , ELECT		
C529	HCEA1CH471T	CAP , ELECT		
C532	HCEA1CKS470T	CAP , ELECT		
C901	HCEA1HH100T	CAP , ELECT	10UF 50V	
C902	HCEA1HH1R0T	CAP , ELECT	1UF 50V	
C903	CCEA1HKS100T	CAP , ELECT	10UF 50V	
C904	HCEA1HH220T	CAP , ELECT	22UF 50V	
C905	HCEA1HH4R7T	CAP , ELECT	4.7UF 50V	
C906	HCQI1H223JZT	CAP , MYLAR	0.022UF 50V	
C907	HCEA1EH220T	CAP , ELECT	22UF 50V	
C908	HCEA1EH220T	CAP , ELECT	22UF 50V	
C909	HCQI1H103JZT	CAP , MYLAR	0.01UF 50V	
C910	HCQI1H332JZT	CAP , MYLAR	3300PF 50V	
C911	HCBS1H103ZFT	CAP , CERAMIC	0.01UF 50V	
C912	CCEA1EKS220T	CAP , ELECT	22UF 25V	

SEQ.	PART NO.	DESCRIPTION	SPECIFICTION	REMARKS
C913	HCBS1H561KBT	CAP , CERAMIC		
C914	HCEA1CKS101T	CAP , ELECT		
C915	HCBS1H103ZFT	CAP , CERAMIC	0.01UF 50V	
C916	HCEA1AKS101T	CAP , ELECT	100UF 10V	
C917	HCBS1H103ZFT	CAP , CERAMIC	0.01UF 50V	
C918	HCEA1HKS1R0T	CAP , ELECT		
C919	HCBS1H104ZFT	CAP , CERAMIC	0.1UF 50V	
C920	HCQI1H332JZT	CAP , MYLAR	3300PF 50V	
C921	HCQI1H103JZT	CAP , MYLAR	0.01UF 50V	
C922	CCEA1EKS220T	CAP , ELECT	22UF 25V	
C923	HCQI1H223JZT	CAP , MYLAR	0.022UF 50V	
C924	HCEA1HKS4R7T	CAP , ELECT		
C925	CCEA1EKS220T	CAP , ELECT	22UF 25V	
C926	HCEA1HH1R0T	CAP , ELECT	1UF 50V	
C927	HCEA1HKS1R0T	CAP , ELECT		
C928	HCBS1H103ZFT	CAP , CERAMIC	0.01UF 50V	
C929	HCEA1HH1R0T	CAP , ELECT	1UF 50V	
C930	HCBS1H103ZFT	CAP , CERAMIC	0.01UF 50V	
C931	HCEA1HH100T	CAP , ELECT	10UF 50V	
C932	HCBS1H104ZFT	CAP , CERAMIC	0.1UF 50V	
C933	HCEA1HH100T	CAP , ELECT	10UF 50V	
C934	HCEA1CH101T	CAP , ELECT	100UF 16V	
C935	HCEA1HH1R0T	CAP , ELECT	1UF 50V	
C936	HCBS1H103ZFT	CAP , CERAMIC	0.01UF 50V	
C937	HCEA1HH1R0T	CAP , ELECT	1UF 50V	
C938	HCEA1HH1R0T	CAP , ELECT	1UF 50V	
C939	HCEA1HH1R0T	CAP , ELECT	1UF 50V	
D301	HVD1SS133MT	DIODE	1SS133T-7	
D304	HVD1SS133MT	DIODE	1SS133T-7	
D305	HVD1SR139-40	0T DIODE	1SR139-40	
D306	HVDMTZJ6.2BT	DIODE , ZENER		
D307	HVD1SR139-40	0T DIODE	1SR139-40	
D402	KVDMTZJ3.0BM	T DIODE , ZENER	3.0V 0.5W	
D403	HVD1SS133MT	DIODE	1SS133T-7	
D503	HVD1SS133MT	DIODE	1SS133T-7	
D901	HVD1SS133MT	DIODE	1SS133T-7	
IC33	HVIKA75330ZT	I.C , VOLTAGE	KA75330	
IC34	HVIKA75390ZT	I.C , VOLTAGE	KA75390	
L301	KLE1H3580SV	CORE , BEAD	PI3.5*8MM	
L311	KLE1H3580SV	CORE , BEAD	PI3.5*8MM	
L401	KLT101K991T	COIL	100UH	
L402	KLT560K991T	COIL	56UH	
L404	KLT101K991T	COIL	100UH	
L405	KLT101K991T	COIL	100UH	
L406	KLT101K991T	COIL	100UH	
L407	KLT101K991T	COIL	100UH	
L408	KLT101K991T	COIL	100UH	
L410	KLE1H3580SV	CORE , BEAD	PI3.5*8MM	
L411	KLE1H3580SV	CORE , BEAD	PI3.5*8MM	
L503	KLT101K991T	COIL	100UH	

SEQ.	PART NO.	DESCRIPTION	SPECIFICTION	REMARKS
L901	KLT101K991T	COIL	100UH	
L902	KLT101K991T	COIL	100UH	
Q401	HVTKSC2785YT	T.R	KSC2785Y	
Q402	HVTKSC2785YT	T.R	KSC2785Y	
Q404	KVTKSA1175YT	T.R	KSA1175Y	
Q405	KVTKSR1204T	T.R	KSR1204	
Q406	HVTKSC945CYT	T.R	KSC945CY	
Q501	KVTKSA1175YT	T.R	KSA1175Y	
Q502	HVTKSC2785YT	T.R	KSC2785Y	
Q503	HVTKSA928AYT	T.R	KSA928AY	
Q504	HVTKTC3203YT	T.R	KTC3203Y	
Q505	HVTKTC3198YT	T.R		
Q506	HVTKTC3198YT	T.R		
Q507	KVTKSA733CYT	T.R	KSA733CY	
Q508	KVTKSA1175YT	T.R	KSA1175Y	
R301	CRD20TJ103T	RES , CARBON	10K OHM 1/5W	
R302	CRD20TJ103T	RES , CARBON	10K OHM 1/5W	
R303	CRD20TJ473T	RES , CARBON	47K OHM 1/5W	
R304	CRD20TJ473T	RES , CARBON	47K OHM 1/5W	
R305	CRD20TJ332T	RES , CARBON	3.3K OHM 1/5W	
R306	CRD20TJ153T	RES , CARBON	15K OHM 1/5W	
R308	CRD20TJ102T	RES , CARBON	1K OHM 1/5W	
R309	CRD20TJ102T	RES , CARBON	1K OHM 1/5W	
R310	CRD20TJ102T	RES , CARBON	1K OHM 1/5W	
R311	CRD20TJ102T	RES , CARBON	1K OHM 1/5W	
R312	CRD20TJ102T	RES , CARBON	1K OHM 1/5W	
R313	CRD20TJ102T	RES , CARBON	1K OHM 1/5W	
R314	CRD20TJ103T	RES , CARBON	10K OHM 1/5W	
R315	CRD20TJ105T	RES , CARBON	1M OHM 1/5W	
R316	CRD20TJ511T	RES , CARBON		
R317	CRD20TJ101T	RES , CARBON	100 OHM 1/5W	
R318	CRD20TJ104T	RES , CARBON	100K OHM 1/5W	
R319	CRD20TJ332T	RES , CARBON	3.3K OHM 1/5W	
R321	CRD20TJ101T	RES , CARBON	100 OHM 1/5W	
R322	CRD20TJ101T	RES , CARBON	100 OHM 1/5W	
R323	CRD20TJ103T	RES , CARBON	10K OHM 1/5W	
R324	CRD20TJ103T	RES , CARBON	10K OHM 1/5W	
R325	CRD20TJ103T	RES , CARBON	10K OHM 1/5W	
R326	CRD20TJ103T	RES , CARBON	10K OHM 1/5W	
R327	CRD20TJ182T	RES , CARBON	1.8K OHM 1/5W	
R328	CRD20TJ182T	RES , CARBON	1.8K OHM 1/5W	
R329	CRD20TJ131T	RES , CARBON	130 OHM 5W J	
R330	CRD20TJ332T	RES , CARBON	3.3K OHM 1/5W	
R331	CRD20TJ131T	RES , CARBON	130 OHM 5W J	
R332	CRD20TJ103T	RES , CARBON	10K OHM 1/5W	
R333	CRD20TJ103T	RES , CARBON	10K OHM 1/5W	
R334	CRD20TJ102T	RES , CARBON	1K OHM 1/5W	
R335	CRD20TJ102T	RES , CARBON	1K OHM 1/5W	
R336	CRD20TJ182T	RES , CARBON	1.8K OHM 1/5W	
R337	CRD20TJ102T	RES , CARBON	1K OHM 1/5W	

SEQ.	PART NO.	DESCRIPTION	SPECIFICTION	REMARKS
R338	CRD20TJ102T	RES , CARBON	1K OHM 1/5W	
R339	CRD20TJ202T	RES , CARBON		
R340	CRD20TJ105T	RES , CARBON	1M OHM 1/5W	
R341	CRD25TJ103T	RES , CARBON		
R342	CRD20TJ102T	RES , CARBON	1K OHM 1/5W	
R343	CRD20TJ102T	RES , CARBON	1K OHM 1/5W	
R344	CRD20TJ103T	RES , CARBON	10K OHM 1/5W	
R345	CRD20TJ102T	RES , CARBON	1K OHM 1/5W	
R346	CRD20TJ103T	RES , CARBON	10K OHM 1/5W	
R347	CRD20TJ474T	RES , CARBON		
R348	CRD20TJ102T	RES , CARBON	1K OHM 1/5W	
R349	CRD20TJ102T	RES , CARBON	1K OHM 1/5W	
R350	CRD20TJ102T	RES , CARBON	1K OHM 1/5W	
R351	CRD20TJ103T	RES , CARBON	10K OHM 1/5W	
R352	CRD20TJ103T	RES , CARBON	10K OHM 1/5W	
R353	CRD20TJ102T	RES , CARBON	1K OHM 1/5W	
R354	CRD20TJ102T	RES , CARBON	1K OHM 1/5W	
R355	CRD20TJ182T	RES , CARBON	1.8K OHM 1/5W	
R356	CRD20TJ102T	RES , CARBON	1K OHM 1/5W	
R357	CRD20TJ154T	RES , CARBON		
R358	CRD20TJ154T	RES , CARBON		
R359	CRD20TJ103T	RES , CARBON	10K OHM 1/5W	
R360	CRD20TJ273T	RES , CARBON	27K OHM 1/5W	
R361	CRD20TJ221T	RES , CARBON	220 OHM 1/5W	
R362	CRD20TJ273T	RES , CARBON	27K OHM 1/5W	
R363	CRD20TJ221T	RES , CARBON	220 OHM 1/5W	
R364	CRD20TJ301T	RES , CARBON	300 OHM 5W J	
R365	CRD20TJ301T	RES , CARBON	300 OHM 5W J	
R367	CRD20TJ102T	RES , CARBON	1K OHM 1/5W	
R368	CRD20TJ102T	RES , CARBON	1K OHM 1/5W	
R370	CRD20TJ102T	RES , CARBON	1K OHM 1/5W	
R371	CRD20TJ102T	RES , CARBON	1K OHM 1/5W	
R372	CRD20TJ102T	RES , CARBON	1K OHM 1/5W	
R373	CRD20TJ102T	RES , CARBON	1K OHM 1/5W	
R374	CRD20TJ105T	RES , CARBON	1M OHM 1/5W	
R375	CRD20TJ680T	RES , CARBON	68 OHM 1/5W	
R376	CRD20TJ473T	RES , CARBON	47K OHM 1/5W	
R377	CRD20TJ101T	RES , CARBON	100 OHM 1/5W	
R378	CRD20TJ102T	RES , CARBON	1K OHM 1/5W	
R379	CRD20TJ102T	RES , CARBON	1K OHM 1/5W	
R380	CRD20TJ102T	RES , CARBON	1K OHM 1/5W	
R381	CRD20TJ102T	RES , CARBON	1K OHM 1/5W	
R382	CRD20TJ102T	RES , CARBON	1K OHM 1/5W	
R383	CRD20TJ102T	RES , CARBON	1K OHM 1/5W	
R384	CRD20TJ101T	RES , CARBON	100 OHM 1/5W	
R385	CRD20TJ272T	RES , CARBON	2.7K OHM 1/5W	
R386	CRD20TJ272T	RES , CARBON	2.7K OHM 1/5W	
R387	CRD20TJ272T	RES , CARBON	2.7K OHM 1/5W	
R388	CRD20TJ272T	RES , CARBON	2.7K OHM 1/5W	
R389	CRD20TJ272T	RES , CARBON	2.7K OHM 1/5W	

SEQ.	PART NO.	DESCRIPTION	SPECIFICTION	REMARKS
R390	CRD20TJ103T	RES , CARBON	10K OHM 1/5W	
R401	CRD20TJ103T	RES , CARBON	10K OHM 1/5W	
R402	CRD20TJ682T	RES , CARBON	6.8K OHM 1/5W	
R403	CRD20TJ123T	RES , CARBON	12K OHM 1/5W	
R404	CRD20TJ334T	RES , CARBON		
R405	CRD20TJ333T	RES , CARBON	33K OHM 1/5W	
R406	KRGS2F1201T	RES , METAL FILM	1.2K 1%	
R407	CRD20TJ123T	RES , CARBON	12K OHM 1/5W	
R409	CRD20TJ273T	RES , CARBON	27K OHM 1/5W	
R410	CRD20TJ103T	RES , CARBON	10K OHM 1/5W	
R411	CRD20TJ203T	RES , CARBON		
R412	CRD20TJ331T	RES , CARBON	330 OHM 1/5W	
R413	CRD20TJ122T	RES , CARBON	1.2K OHM 1/5W	
R414	CRD20TJ471T	RES , CARBON	470 OHM 1/5W	
R415	CRD20TJ272T	RES , CARBON	2.7K OHM 1/5W	
R416	CRD20TJ681T	RES , CARBON	680 OHM 1/5W	
R417	CRD20TJ681T	RES , CARBON	680 OHM 1/5W	
R418	CRD20TJ472T	RES , CARBON	4.7K OHM 1/5W	
R420	CRD20TJ152T	RES , CARBON	1.5K OHM 1/5W	
R421	CRD20TJ471T	RES , CARBON	470 OHM 1/5W	
R422	CRD20TJ101T	RES , CARBON	100 OHM 1/5W	
R423	CRD20TJ103T	RES , CARBON	10K OHM 1/5W	
R424	CRD20TJ102T	RES , CARBON	1K OHM 1/5W	
R425	CRD20TJ132T	RES , CARBON		
R426	CRD25TJ182T	RES , CARBON		
R427	CRD20TJ822T	RES , CARBON	8.2K OHM 1/5W	
R428	CRD20TJ225T	RES , CARBON	2.2M 1/5W	
R429	CRD20TJ201T	RES , CARBON	200 OHM	
R430	CRD20TJ362T	RES , CARBON	3.6K OHM 1/5W	
R431	CRD20TJ272T	RES , CARBON	2.7K OHM 1/5W	
R432	CRD20TJ682T	RES , CARBON	6.8K OHM 1/5W	
R433	CRD20TJ122T	RES , CARBON	1.2K OHM 1/5W	
R434	CRD20TJ511T	RES , CARBON		
R435	CRD20TJ101T	RES , CARBON	100 OHM 1/5W	
R436	CRD20TJ363T	RES , CARBON		
R438	CRD20TJ153T	RES , CARBON	15K OHM 1/5W	
R439	CRD20TJ563T	RES , CARBON	56K OHM 1/5W	
R440	CRD20TJ562T	RES , CARBON	5.6K OHM 1/5W	
R442	CRD20TJ102T	RES , CARBON	1K OHM 1/5W	
R443	CRD20TJ511T	RES , CARBON		
R445	CRD20TJ112T	RES , CARBON		
R446	KRGS2F3001T	RES , METAL FILM	3K 1%	
R448	CRD20TJ473T	RES , CARBON	47K OHM 1/5W	
R449	CRD20TJ473T	RES , CARBON	47K OHM 1/5W	
R501	CRD20TJ471T	RES , CARBON	470 OHM 1/5W	
R502	CRD20TJ333T	RES , CARBON	33K OHM 1/5W	
R503	CRD20TJ153T	RES , CARBON	15K OHM 1/5W	
R505	CRD20TJ102T	RES , CARBON	1K OHM 1/5W	
R507	CRD20TJ102T	RES , CARBON	1K OHM 1/5W	
R510	CRD20TJ221T	RES , CARBON	220 OHM 1/5W	

SEQ.	PART NO.	DESCRIPTION	SPECIFICTION	REMARKS
R513	CRD20TJ223T	RES , CARBON	22K OHM 1/5W	
R514	CRD20TJ470T	RES , CARBON	47 OHM 1/5W	
R515	CRD20TJ102T	RES , CARBON	1K OHM 1/5W	
R516	CRD20TJ2R2T	RES , CARBON	2.2 OHM 1/5W	
R517	CRD20TJ561T	RES , CARBON	560 OHM 1/5W	
R518	CRD20TJ103T	RES , CARBON	10K OHM 1/5W	
R519	CRD20TJ512T	RES , CARBON	5.1K OHM J	
R520	CRD20TJ103T	RES , CARBON	10K OHM 1/5W	
R521	CRD20TJ223T	RES , CARBON	22K OHM 1/5W	
R526	CRD20TJ103T	RES , CARBON	10K OHM 1/5W	
R527	CRD20TJ750T	RES , CARBON	75 OHM 1/5W	
R528	CRD20TJ821T	RES , CARBON	820 OHM 1/5W	
R529	CRD20TJ103T	RES , CARBON	10K OHM 1/5W	
R530	CRD20TJ821T	RES , CARBON	820 OHM 1/5W	
R901	CRD20TJ124T	RES , CARBON		
R902	CRD20TJ471T	RES , CARBON	470 OHM 1/5W	
R903	KRGS2F2701T	RES , METAL FILM	2.7K 1%	
R904	CRD20TJ124T	RES , CARBON		
R905	CRD20TJ473T	RES , CARBON	47K OHM 1/5W	
R906	CRD20TJ473T	RES , CARBON	47K OHM 1/5W	
R907	CRD20TJ101T	RES , CARBON	100 OHM 1/5W	
R908	CRD20TJ101T	RES , CARBON	100 OHM 1/5W	
R909	CRD20TJ102T	RES , CARBON	1K OHM 1/5W	
R910	CRD20TJ102T	RES , CARBON	1K OHM 1/5W	
R911	CRD20TJ473T	RES , CARBON	47K OHM 1/5W	
R912	CRD20TJ473T	RES , CARBON	47K OHM 1/5W	
R913	CRD20TJ682T	RES , CARBON	6.8K OHM 1/5W	
R914	CRD20TJ103T	RES , CARBON	10K OHM 1/5W	
R915	CRD20TJ682T	RES , CARBON	6.8K OHM 1/5W	
R917	CRD20TJ682T	RES , CARBON	6.8K OHM 1/5W	
R918	CRD20TJ682T	RES , CARBON	6.8K OHM 1/5W	
R919	CRD20TJ682T	RES , CARBON	6.8K OHM 1/5W	
R920	CRD20TJ822T	RES , CARBON	8.2K OHM 1/5W	
R921	CRD20TJ822T	RES , CARBON	8.2K OHM 1/5W	
VR31	HVN1RA104B01	T RES , SEMI FIXED(100K OHM)	RH0638C-1	
XT31	HOX16000E160	T OSC , CRYSTAL	16MHZ	
XT33	HOX17734E160	T OSCILLATER CRYSTAL,CERAMIC	1.7734MHZ	
	CMC1A197	CASE , SHIELD(TOP)	VCR PCB	
	CMC1A199	PLATE , SHIELD(BOTTOM)	VCR PCB	
	KJD7D2P04WKA	ASS'Y , K-30 DECK 6HD PAL	K-30 6HD	
	KMH1V007	HOLDER , LED		
	KMH1V008	HOLDER , PHOTOTR		
DA01	KVTSG239S	PHOTO , INTERRUPTER		
DA02	KVTSG239S	PHOTO , INTERRUPTER		
DA03	KVTST5811	PHOTO , T.R		
DA04	KVTST5811	PHOTO , T.R		
DA05	KVDAL151HA	L.E.D (RED)		
DA06	KSTJDS1105	SWITCH , PROGRAM		
BN7A	CWC1B2A18A22	0B CARD CABLE 18P 1.0P CN7A	220MM	
BN7A	KJP18GA117ZG	WAFER , CARD	18P 1M/M	

SEQ.	PART NO.	DESCRIPTION	SPECIFICTION	REMARKS
BT31	HGP15BNH3A3H	BATTERY , RECHARGEABLE	GP15BNH3A	
CN21	KJP15GA117ZG	WAFER , CARD CABLE	15P 1M/M S/T	
CN31	BJPTKCG10P-A	1 CONNECTOR	TKC-G10P-A1	
CN32	CWC1B2A07B17	0A CARD CABLE 7P 1.25P(170MM)		
CN32	KJP07GA115ZG	WAFER , CARD CABLE	GF120-07S	
CN35	CWZAD7100CN3	5 ASS'Y , CONNECTOR		
CN41	KJP10GA115ZG	WAFER , CARD CABLE	GF120-10S	
CN52	CWZAD7100CN5	2 ASS'Y , CONNECTOR	8PIN	
CN57	KJP07GA19ZM	WAFER	MOLEX5301	
CN8A	CWB1C910170M	D ASS'Y CONNECTOR 10PIN 2.5P	170MM	
IC31	HVIM37762-1P	1 IC , MI-COM	M37762MCA	
IC32	HVIKA3082	I.C , DC MOTOR DRIVER	KA3082	
IC35	HVI24WC04P	IC-8PIN AT24C04	24WC04P	
IC41	HVILA71570M	I.C , Y/C	LA71570M	
IC91	HVILA72634M	I.C , HI-FI	LA72634M	
L409	KLQD153K705N	COIL , CHOCK	7H 153K	
R320	CRG2ANJ3R9H	RES , METAL OXIDE FILM		
T501	CLO8B004Z	COIL , AUDIO BIAS		
W001	CWE4202150AR	WIRE ASS'Y		
XT32	BOX00032A120	C CRYSTAL	N 32,768KHZ	
XT41	HOX03579DSER	T OSC , CRYSTAL	3.579MHZ	
XT42	HOX04433DSER	T OSCILLATER CRYSTAL,CERAMIC	4.43MHZ,P	

SEQ.	PART NO.	DESCRIPTION	SPECIFICATION	REMARKS
	COP11576C	**VCR TUNER PCB ASS'Y**	(EUR) QDR-7100CC	
	CIP11576C	**VCR TUNER PCB AUTO ASS'Y**	(EUR) QDR-7100CC	
	CUP11576Z	**PCB , VCR TUNER**		
C521	HCEA1CH470T	CAP , ELECT		
C522	CCKT1H103ZF	CAP , CERAMIC	0.01UF 50V ZF	
C523	HCEA1HH220T	CAP , ELECT	22UF 50V	
C524	CCKT1H103ZF	CAP , CERAMIC	0.01UF 50V ZF	
C525	HCEA1EH101T	CAP , CERAMIC	100UF 25V	
C526	CCKT1H103ZF	CAP , CERAMIC	0.01UF 50V ZF	
C527	HCEA1HH101T	CAP , ELECT	100UF 50V	
C528	HCEA1HHR22T	CAP , ELECT		
C529	HCBS1H101KBT	CAP , CERAMIC	100PF 50V K	
C530	HCEA1CH470T	CAP , ELECT		
C531	CCKT1H103ZF	CAP , CERAMIC	0.01UF 50V ZF	
C532	HCBS1H101KBT	CAP , CERAMIC	100PF 50V K	
C815	HCEA1EH221T	CAP , ELECT	220UF 25V	
C816	HCEA1EH470T	CAP , ELECT	47UF 25V	
C817	HCEA1CH101T	CAP , ELECT	100UF 16V	
C821	HCEA1AH471T	CAP , ELECT	470UF 10V	
C822	HCEA1EH470T	CAP , ELECT	47UF 25V	
C823	HCQI1H103JZT	CAP , MYLAR	0.01UF 50V J	
C824	HCEA1CH101T	CAP , ELECT	100UF 16V	
C826	HCQI1H103JZT	CAP , MYLAR	0.01UF 50V J	
C827	HCEA1EH470T	CAP , ELECT	47UF 25V	
C828	HCEA1CH101T	CAP , ELECT	100UF 16V	
C830	HCEA1EH101T	CAP , ELECT	100UF 25V	
D501	HVD1SR139-400	DIODE	1SR139-400T	
D502	HVD1SS133MT	DIODE	1SS133T-77	
D809	HVDMTZJ9.1BT	DIODE , ZENER		
D810	HVDMTZJ5.6BT	DIODE , ZENER		
D813	HVD1SS133MT	DIODE	1SS133T-77	
D816	HVDMTZJ5.6BT	DIODE , ZENER		
IC52	HVIKA33VTA	I.C , ZENER	KA33VTA	
L504	KLT150K991T	COIL , PEAKING	UH 15 KT	
Q801	HVTKSA928AYT	T.R	KSA928AY	
Q802	HVTKSC2328AYT	T.R	KSC2328AY	
Q803	HVTKSC945CYT	T.R	KSC945CY	
Q804	HVTKSC2328AYT	T.R	KSC2328AY	
Q805	KVTKSR1201T	T.R	KSR1201	
Q806	KVTKSR1201T	T.R	KSR1201	
Q807	HVTKSC2328AYT	T.R	KSC2328AY	
R522	CRD20TJ122T	RES , CARBON	1.2K OHM 1/5W J	
R523	CRD20TJ821T	RES , CARBON	820 OHM 1/5W J	
R525	CRD20TJ271T	RES , CARBON	270 OHM 1/5W J	
R531	CRD20TJ101T	RES , CARBON	100 OHM 1/5W J	
R532	CRD20TJ101T	RES , CARBON	100 OHM 1/5W J	
R533	CRD20TJ101T	RES , CARBON	100 OHM 1/5W J	
R534	CRD20TJ101T	RES , CARBON	100 OHM 1/5W J	
R805	CRD25TJ103T	RES , CARBON		
R806	CRD25TJ562T	RES , CARBON	5.6K OHM 1/4W J	

SEQ.	PART NO.	DESCRIPTION	SPECIFICATION	REMARKS
R807	CRD25TJ222T	RES , CARBON		
R808	CRD20TJ222T	RES , CARBON	2.2K OHM 1/5W J	
R814	CRD25TJ471T	RES , CARBON		
R815	CRD20TJ103T	RES , CARBON	10K OHM 1/5W J	
R816	CRD20TJ751T	RES , CARBON	750 OHM 1/5W J	
R820	CRD25TJ471T	RES , CARBON		
BN7B	KJP18GB113ZG	WAFER	18P 1M/M ANGLE	
BN8B	KJP10GA01ZM	WAFER	MOLEX 5267-10A	
CN97	KJP08GB99ZM	CONNECTOR , HOUSING	MOLEX35237-0810	
C812	CCEA2AH470E	CAP , ELECT	47UF 100V	
C829	HCEA1EH471E	CAP , ELECT	470UF 25V	
R524	KRD50FJ152T	RES , CARBON	1.5K OHM 1/2W J	
SW52	KST1A010Z	SW , TACT	CN	
TU51	HPTMI-5MH02	TUNER , PAL HI-FI	PTMI-5MH02	

SEQ.	PART NO.	DESCRIPTION	SPECIFICATION	REMARKS
	COP11577C	**VCR MPX PCB ASS'Y (EUR)**	QDR-7100CC	
	CIP11577C	**VCR MPX PCB AUTO ASS'Y (EUR)**	QDR-7100CC	
	CUP11577Z	**PCB , VCR MPX**		
C001	CCKT1H102KB	CAP , CERAMIC	1000PF 50V KB	
C007	HCBS1H471KBT	CAP , CERAMIC		
C008	HCBS1C152MXT	CAP , CERAMIC	1500PF 16V M	
C009	HCEA1CH100T	CAP , ELECT	10UF 16V	
C010	HCEA1CH100T	CAP , ELECT	10UF 16V	
C011	HCEA1HH3R3T	CAP , ELECT		
C012	HCBS1H104ZFT	CAP , CERAMIC	0.1UF 50V Z	
C013	HCBS1H104ZFT	CAP , CERAMIC	0.1UF 50V Z	
C014	HCEA1CH100T	CAP , ELECT	10UF 16V	
C016	HCEA1CH470T	CAP , ELECT		
C017	HCBS1H471KBT	CAP , CERAMIC		
C018	HCBS1H104ZFT	CAP , CERAMIC	0.1UF 50V Z	
C020	HCBS1H1R5MCT	CAP , CERAMIC	1.5P	
C021	HCBS1H1R5MCT	CAP , CERAMIC	1.5P	
C022	CCKT1H471KB	CAP , CERAMIC	470PF 50V KB	
C023	CCCT1H221JC	CAP , CERAMIC	PF220 50V JC	
C024	CCKT1H152KB	CAP , CERAMIC	1500PF 550V KB	
C025	HCEA1CH100T	CAP , ELECT	10UF 16V	
C026	HCEA1HH4R7T	CAP , ELECT	4.7UF 50V	
C027	HCQI1H333JZT	CAP , MYLAR	0.033UF 50V J	
C028	HCQI1H333JZT	CAP , MYLAR	0.033UF 50V J	
C101	CCKT1H333ZF	CAP , CERAMIC	0.033UF 50V ZF	
C102	CCKT1H151KB	CAP , CERAMIC	150PF 50V KB	
C104	CCKT1H333ZF	CAP , CERAMIC	0.033UF 50V ZF	
C105	CCKT1H103ZF	CAP , CERAMIC	0.01UF 50V ZF	
C106	HCEA1CH100T	CAP , ELECT	10UF 16V	
C107	CCKT1H222ZF	CAP , CERAMIC		
D001	HVD1SS133MT	DIODE	1SS133T-77	
D002	HVD1SS133MT	DIODE	1SS133T-77	
L003	KLT4R7K991T	COIL	4.7UH	
L004	KLT4R7K991T	COIL	4.7UH	
L005	KLT101K991T	COIL	100UH	
L101	KLT150K991T	COIL , PEAKING	UH 15 KT	
Q101	HVTKSA1175YT	T.R	KSA1175Y(DEAD)	
R001	CRD20TJ102T	RES , CARBON	1K OHM 1/5W J	
R007	CRD20TJ101T	RES , CARBON	100 OHM 1/5W J	
R008	CRD20TJ101T	RES , CARBON	100 OHM 1/5W J	
R009	CRD20TJ273T	RES , CARBON	27K OHM 1/5W J	
R010	CRD20TJ101T	RES , CARBON	100 OHM 1/5W J	
R011	CRD20TJ101T	RES , CARBON	100 OHM 1/5W J	
R101	CRD20TJ105T	RES , CARBON	1M OHM 1/5W J	
R102	CRD20TJ222T	RES , CARBON	2.2K OHM 1/5W J	
R103	CRD20TJ104T	RES , CARBON	100K OHM 1/5W J	
R104	CRD20TJ125T	RES , CARBON	1.2M 1/5W J	
R105	CRD20TJ391T	RES , CARBON		
R106	CRD20TJ682T	RES , CARBON	6.8K OHM 1/5W J	
R107	CRD20TJ125T	RES , CARBON	1.2M 1/5W J	

SEQ.	PART NO.	DESCRIPTION	SPECIFICATION	REMARKS
R108	CRD20TJ682T	RES , CARBON	6.8K OHM 1/5W J	
R109	CRD20TJ101T	RES , CARBON	100 OHM 1/5W J	
R110	CRD20TJ101T	RES , CARBON	100 OHM 1/5W J	
CN1B	KJP12GF032ZY	WAFER , 12P(YEON HO 3.5X5.5MM)	YFAW025-NN	
IC01	BVIMSP3407GQG	B8 IC MPX (GERMAN A2 ONLY) QFP	MSP3407G-QG-B8	
IC01	BVIMSP3417GQG	B8 IC MPX (UK : A2 + NICAM) QFP	MSP3417G-QG-B8	
IC11	BVISDA5650XSO	20 I.C VPS/PDC (SMD)	SDA5650X-SOIC20	
PA01	KMR1V007	PCB , SUPPORTER	ANGLE	
XT01	HOX18432A120C	OSCILLATER CRYSTAL,CERAMIC	18.432MHZ	

IC INTERNAL DIAGRAMS (DVD PART)

I.C PIN DESCRIPTIONS (u-COM, FLASH : MB90F476) : IC71

PIN No.	Pin Name	I/O	Function
1	NC		NO CONNECTION
2	VFD_BLK	O	FIP DISPLAY CONTROL PORT
3	VFD_CLK	O	
4	VFD_DATA	O	
5	VFD_CE	O	
6	STBY_LED		STAND BY LED ON/OFF CONTROL PORT
7	RELAY_ON	O	RELAY ON/OFF CONTROL PORT
8	VIDEO_SW 06	O	VIDEO IN/OUT CONTROL PORT
9	VIDEO_SW 01	O	
10	VIDEO_SW 02	O	
11	GND		GND PORT
12	VIDEO_SW 04	O	VIDEO IN/OUT CONTROL PORT
13	FAN_CONTROL	O	FAN ON/OFF CONTROL PORT
14	SUB_MUTE	O	SUB WOOFER MUTE PORT
15	MIX_ON/OFF	O	MIX ON/OFF CONTROL PORT
16	NC		NO CONNECTION
17	NC		
18	DVD_DATA_OUT	O	DVD INTERFACE(u-COM <--> ESS6028)
19	DVD_DATA_IN	I	
20	DVD_SCKO	O	
21	NC		NO CONNECTION
22	NC		
23	FLASH_W5(VCC)	I	FLASH DOWNLOAD POWER SUPPLY
24	DVD_POWER	O	DVD ON/OFF CONTROL PORT
25	DVD_RESET	O	DVD INTERFACE(u-COM <--> ESS6028)
26	DVD_FREQ	O	
27	FLASH_W4(L)		FLASH DOWNLOAD SIGNAL IN/OUT PORT
28	FLASH_W3(H->L)		
29	POP_CONTROL	I	POP NOISE CONTROL PORT
30	VIDEO_SW 05	O	VIDEO IN/OUT CONTROL PORT
31	POWER_ON	O	POWER ON/OFF CONTROL PORT
32	NC		NO CONNECTION
33	NC		
34	NC		
35	VCC	I	POWER SUPPLY PORT(+2.8V)
36	VCC	I	
37	GND		GND PORT
38	KEY_01	I	FRONT PANEL KEY CONTROL PORT
39	KEY_02	I	
40	NC		NO CONNECTION
41	OPTION_A	I	VERSION OPTION PORT
42	GND		GND PORT
43	OPTION_B	I	VERSION OPTION PORT
44	OPTION_C	I	
45	OPTION_D	I	

PIN No.	Pin Name	I/O	Function
46	NC		NO CONNECTION
47	GND		GND PORT
48	GND		
49	FLASH_W2(H)		FLASH DOWNLOAD SIGNAL IN/OUT PORT
50	VDD	I	POWER SUPLY PORT(+3.3V)
51	FLASH_W1(L->H)		FLASH DOWNLOAD SIGNAL IN/OUT PORT
52	RDS_CLK	O	RDS/CLK. OUTPUT PORT
53	VCR_CE	I	VCR INTERFACE
54	VCC	I	POWER SUPPLY PORT(+2.8V)
55	DVD_MREQ	O	DVD INTERFACE(u-COM <--> ESS6028)
56	REMOTE_IN	I	REMOTE CONTROL SENSOR DATA INPUT
57	VCR_KEY_IN	I	VCR INTERFACE
58	VCR_DATA_IN I		
59	NC		NO CONECTION
60	VCR_CLK	I	VCR INTERFACE
61	VCR_KEY_OUT	O	
62	RDS_DATA	I	RDS/DATA. INPUT PORT
63	VCR_POWER_ON	O	VCR POWER ON/OFF PORT
64~65	NC		NO CONNECTION
66	APO_TWARN	I	DIGITAL INTERFACE(u-COM <-> DDX8000)
67	APO_PWDN	O	
68	APO_RESET	O	
69	APO_SDA	O	
70	APO_SCL	O	
71~72	NC		NO CONNECTION
73	VOLUME -	I	ELECTRONIC VOLUME UP/DOWN CONTROL
74	VOLUME +	I	
75	HP_IN	I	HEADPHONE INSERT SENSING PORT
76	NC		NO CONNECTION
77	RESET	I	u-COM RESET PORT
78	NC		NO CONNECTION
79~80	NC		
81	GND		GND PORT
82	X_IN	I	4.19MHz CRYSTAL CONNECTION PORT
83	X_OUT	O	
84	VCC	I	POWER SUPPLY PORT(+2.8V)
85~86	NC		NO CONNECTION
87	PLL_DATA_IN	I	PLL DATA INPUT PORT
88	PLL_CE	O	PLL CHIP ENABLE PORT
89	PLL_CLK	O	PLL CLK OUTPUT PORT
90	PLL_DATA_OUT	O	PLL DATA OUTPUT PORT
91	TUNED(L)	I	TUNED DISPLAY CONTROL PORT("L")
92	STEREO(L)	I	STEREO DISPLAY CONTROL PORT("L")
93	NC		NO CONNECTION
94	FUN_MUTE	O	FUNCTION MUTE PORT
95~97	NC		NO CONNECTION
98	TC9164_STB	O	FUNC. IC(TC9164) CONTROL PORT
99	TC9164_CLK	O	
100	TC9164_DATA	O	

■ PIN ASSIGNMENTS (TOP VIEW)

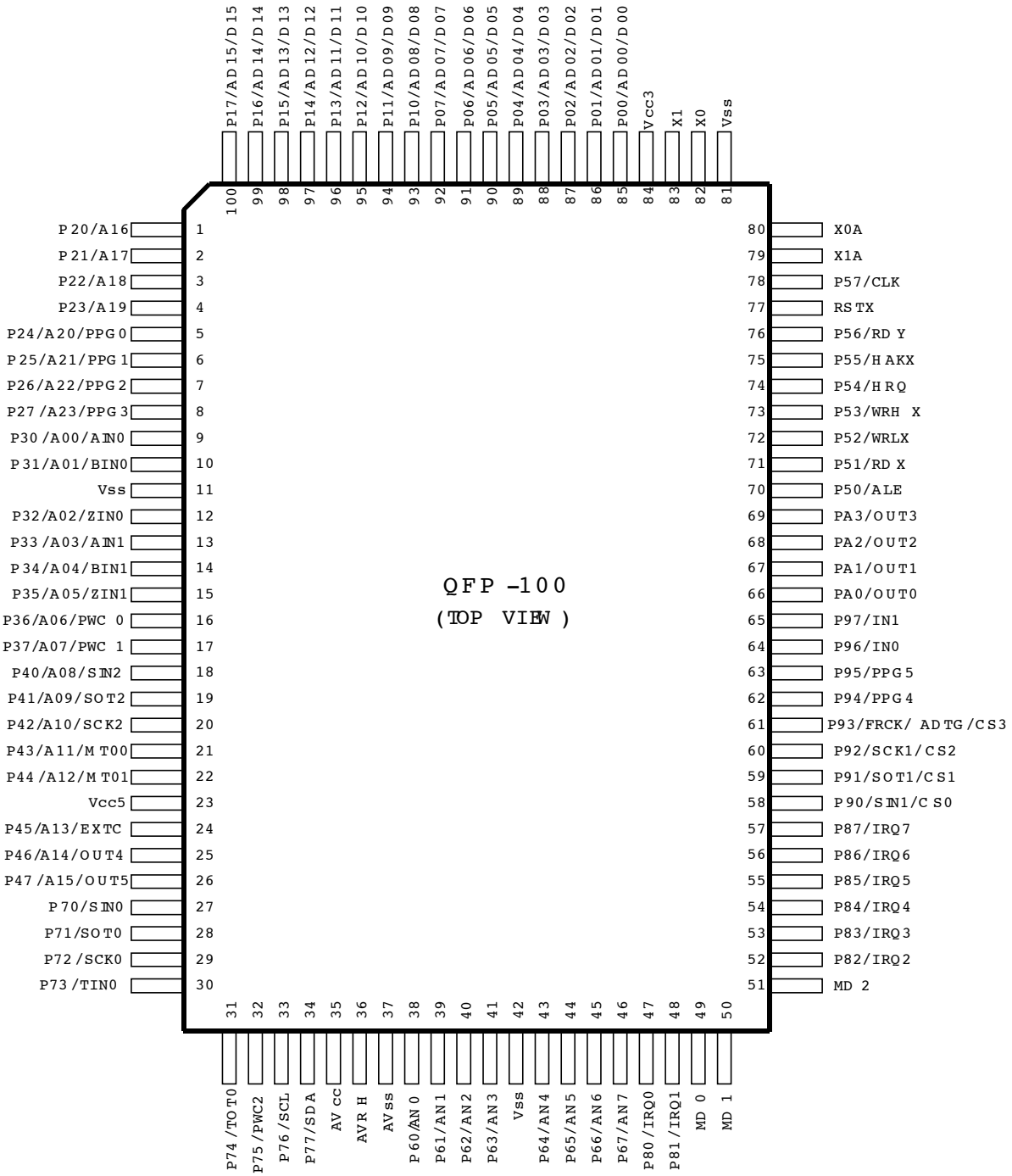

■ BLOCK DIAGRAM

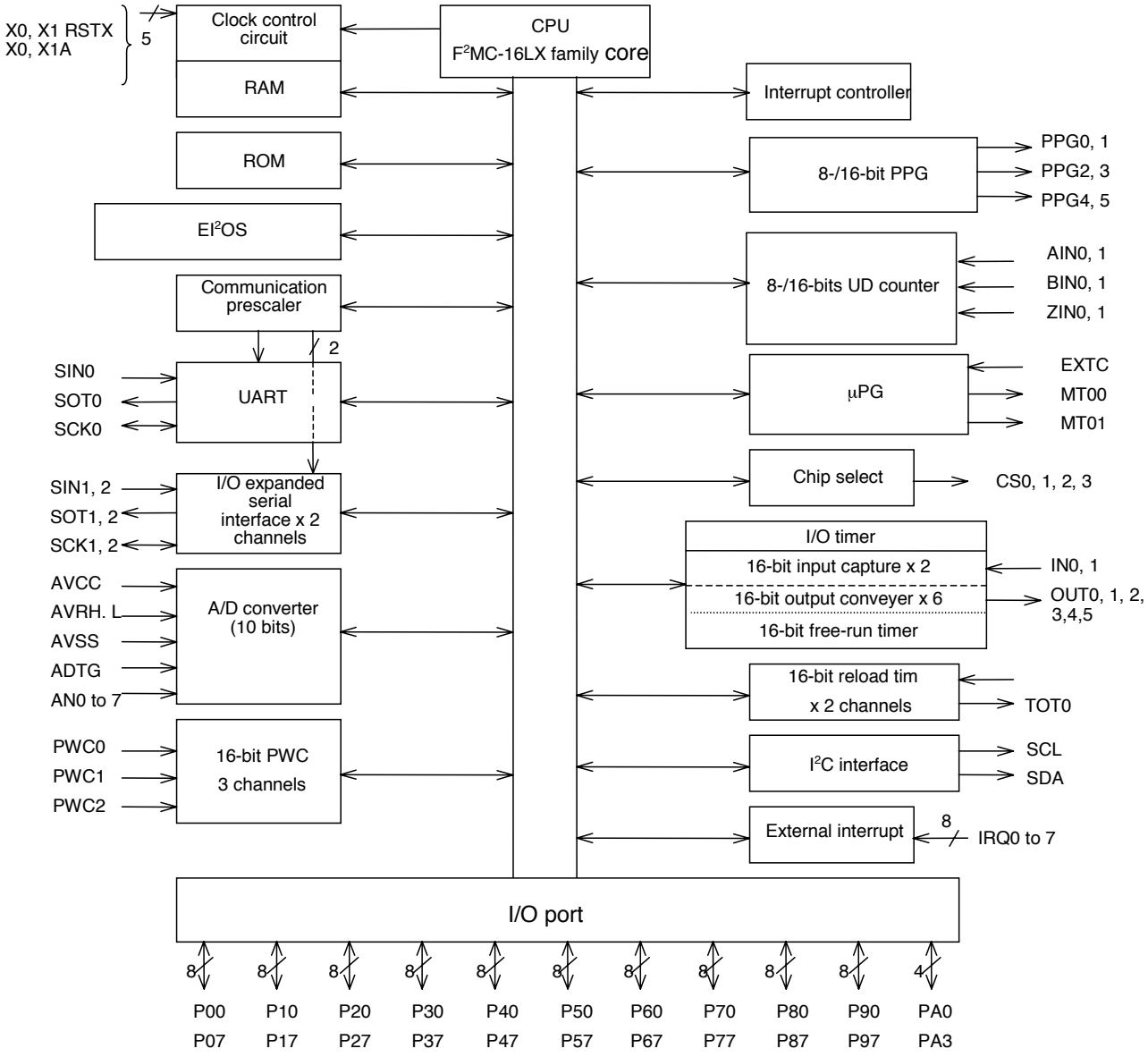

I.C PIN DESCRIPTIONS (D-A CONVERTER, PCM1606) : IC32

PIN No.	Pin Name	I/O	Function
1	DIN-1	I	SERIAL AUDIO DATA INPUT(VOUT1 and VOUT2)
2	DIN-2	I	SERIAL AUDIO DATA INPUT(VOUT3 and VOUT4)
3	DIN-3	I	SERIAL AUDIO DATA INPUT(VOUT5 and VOUT6)
4	FMT1		FORMAT SELECT1
5	FMT0		FORMAT SELECT2
6	ZEROA		ZERO-DATA FLAG
7	AGND		ANALOG GND PORT
8	VOUT5(C)	O	VOLTAGE OUTPUT FOR CENTER-CHANNEL
9	VOUT6(LFE)	O	VOLTAGE OUTPUT FOR LFE-CHANNEL
10	VOUT1(FL)	O	VOLTAGE OUTPUT FOR FL-CHANNEL
11	VOUT2(FR)	O	VOLTAGE OUTPUT FOR FR-CHANNEL
12	VOUT3(LS)	O	VOLTAGE OUTPUT FOR LS-CHANNEL
13	VOUT4(RS)	O	VOLTAGE OUTPUT FOR RS-CHANNEL
14	VCOM		COMMON VOLTAGE OUTPUT
15	VCC	I	POWER SUPPLLY, 5V
16	DEMPO	I	DE-EMPHASIS CONTROL 0
17	DEMP1	I	DE-EMPHASIS CONTROL 1
18	LRCK_IN	I	LEFT and FIGHT CLOCK INPUT
19	BLACK_IN	I	SHIFT CLOCK INPUT FOR SERIAL AUDIO DATA
20	MCLK_IN	I	MASTER CLOCK INPUT

■ BLOCK DIAGRAM

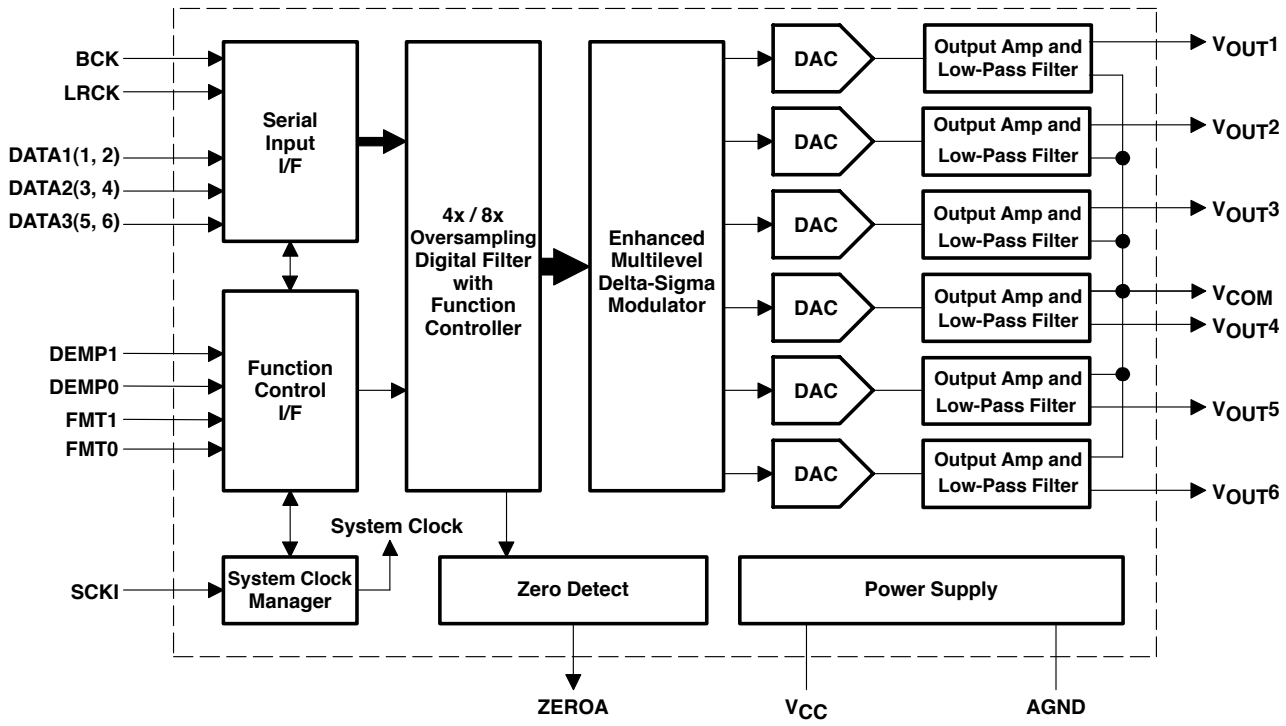

I.C PIN DESCRIPTIONS (Power Amplifier : DDX2100) : IC80, 83, 86

PIN No.	Pin Name	I/O	Function
1	GNDS	O	Substrate ground
2	OUTNR	O	Right output, negative reference
3	OUTNR	O	
4	VCC2N	I	Power
5	PGND2N	O	Power grounds
6	PGND2P	O	
7	VCC2P	I	Power
8	OUTPR	O	Right output, positive reference
9	OUTPR	O	
10	OUTNL	O	Left output, negative reference
11	OUTNL	O	
12	VCC1N	I	Power
13	PGND1N	O	Power grounds
14	PGND1P	O	
15	VCC1P	I	Power
16	OUTPL	O	Left output, positive reference
17	OUTPL	O	
18	NC		Do not connect
19	GNDREF	O	Logic reference ground
20	GNDR1	O	Internal regulator gound
21	VREG1		Internal regulator voltage requires bypass capacitor
22	VREG1		
23	VL	O	Logic reference ground
24	CONFIG	I	Configuration (0=Normal, 1=Parallel operation for mono)
25	PWRDN	I	Power Down (0=Shutdown, 1=Normal)
26	TRI-STATE	I	Tri-State (0=All MOSFETS Hi-Z, 1=Normal)
27	FAULT	O	Fault output indicator; Overcurrent Overtemperature (0=Fault, 1=Normal).
28	TWARN	O	Thermal warning output (0=Warning TJ >= 130°ΔC, 1=Normal).
29	INLA	I	Left A logic input signal
30	INLB	I	Left B logic input signal
31	INRA	I	Right A logic input signal
32	INRB	I	Right B logic input signal
33	VREG2		Internal regulator voltage requires bypass capacitor.
34	VREG2		
35	VSIG	I	Signal Positive supply
36	VSIG	I	

■ BLOCK DIAGRAM

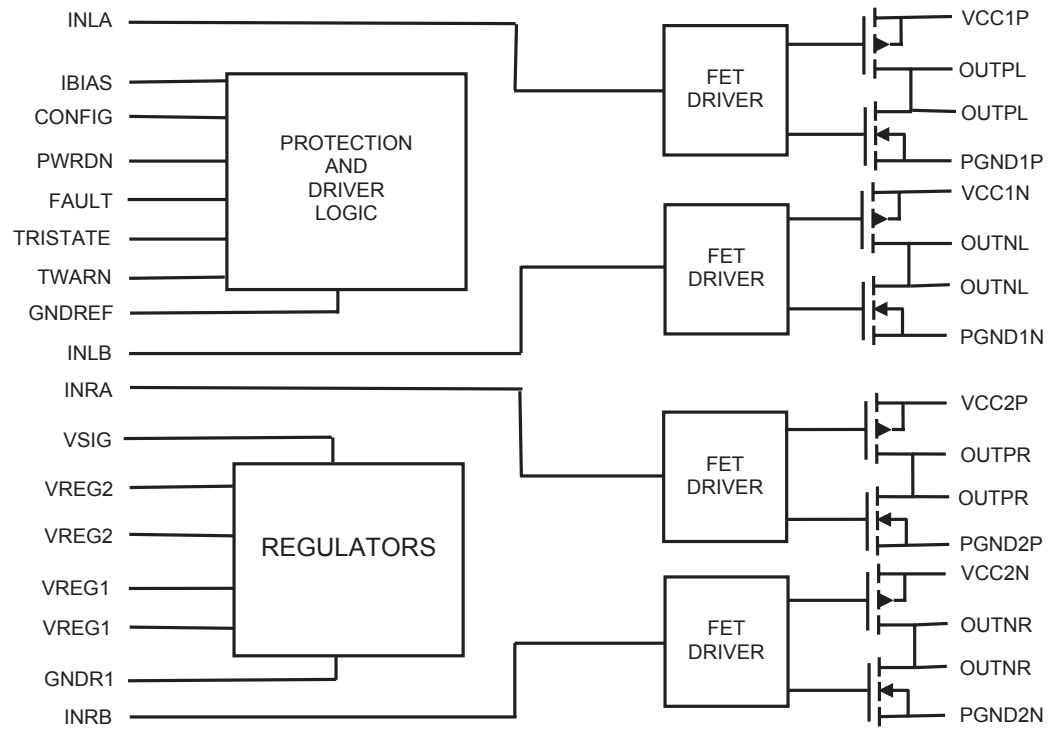

TC9164AF (FUNCTION/INPUT : IC15)

■ BLOCK DIAGRAM

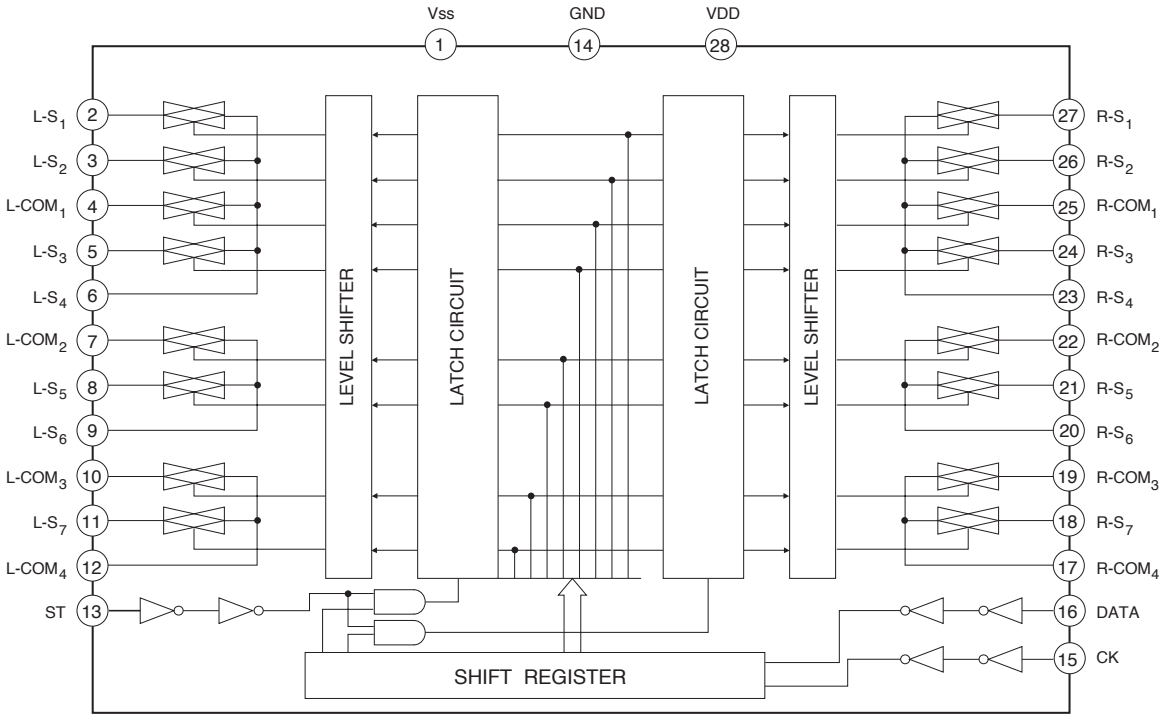

I.C PIN DESCRIPTIONS (Digital Audio Processor : DDX8000) : IC75

PIN No.	Pin Name	I/O	Function
1	MVO	I	Master Volume Override
2	GND	O	Ground
3	VDD3.3		3.3V I/O Supply
4	GND	O	Ground
5	VDD2.5		2.5V Logic Supply
6	SDI78	I	I2S Data Channels 7 & 8
7	SDI56	I	I2S Data Channels 5 & 6
8	SDI34	I	I2S Data Channels 3 & 4
9	SDI12	I	I2S Data Channels 1 & 2
10	LRCKI	I	I2S Left/Right Clock
11	BICKI	I	I2S Bit Clock
12	VDD3.3		3.3V I/O Supply
13	GND	O	Ground
14	VDD2.5		2.5V Logic Supply
15	RESET	I	Glob al Reset Input
16	PLLB	I	Phase Locked Loop Bypass
17	SA	I	I2 C Select Add ress
18	SDA	I/O	I2 C Serial Data
19	SCL	O	I2 C Serial Clock
20	XTI	I	Clock Input
21	PLLF	I	PLL Filter
22	VDD_PL		PLL Supply
23	GND_PL		PLL Ground
24	VDD3.3		3.3V I/O Supply
25	CKOUT	O	Clock Output
26	VDD2.5		2.5V Logic Supply
27	GND	O	Ground
28	VDD3.3		3.3V I/O Supply
29	OUT8B	O	PWM Channel 8 Output B
30	OUT8A	O	PWM Channel 8 Output A
31	OUT7B	O	PWM Channel 7 Output B
32	OUT7A	O	PWM Channel 7 Output A
33	OUT6B	O	PWM Channel 6 Output B
34	OUT6A	O	PWM Channel 6 Output A
35	VDD3.3		3.3V I/O Supply
36	GND	O	Ground
37	VDD2.5		2.5V Logic Supply
38	OUT5B	O	PWM Channel 5 Output B
39	OUT5A	O	PWM Channel 5 Output A
40	OUT4B	O	PWM Channel 4 Output B
41	OUT4A	O	PWM Channel 4 Output A
42	OUT3B	O	PWM Channel 3 Output B
43	OUT3A	O	PWM Channel 3 Output A
44	VDD3.3		3.3V I/O Supply
45	GND	O	Ground

PIN No.	Pin Name	I/O	Function
46	VDD2.5		2.5V Logic Supply
47	OUT2B	O	PWM Channel 2 Output B
48	OUT2A	O	PWM Channel 2 Output A
49	OUT1B	O	PWM Channel 1 Output B
50	OUT1A	O	PWM Channel 1 Output A
51	EAPD	O	External Amp Power Down
52	VDD3.3	O	3.3V I/O Supply
53	GND		Ground
54	VDD2.5		2.5V Logic Supply
55	BICKO	O	I2S Serial Clock Output
56	LRCKO	O	I2S Left/Right Clock Output
57	SDO12	O	I2S Data Channels 1&2 Output
58	SDOO34	O	I2S Data Channels 3&4 Output
59	VDD3.3	O	3.3V I/O Supply
60	GND		Ground
61	VDD2.5		2.5V Logic Supply
62	SDO56	O	I2S Data Channels 5&6 Output
63	SDO78	O	I2S Data Channels 7&8 Output
64	PWDN	O	Device PowerDown

■ BLOCK DIAGRAM

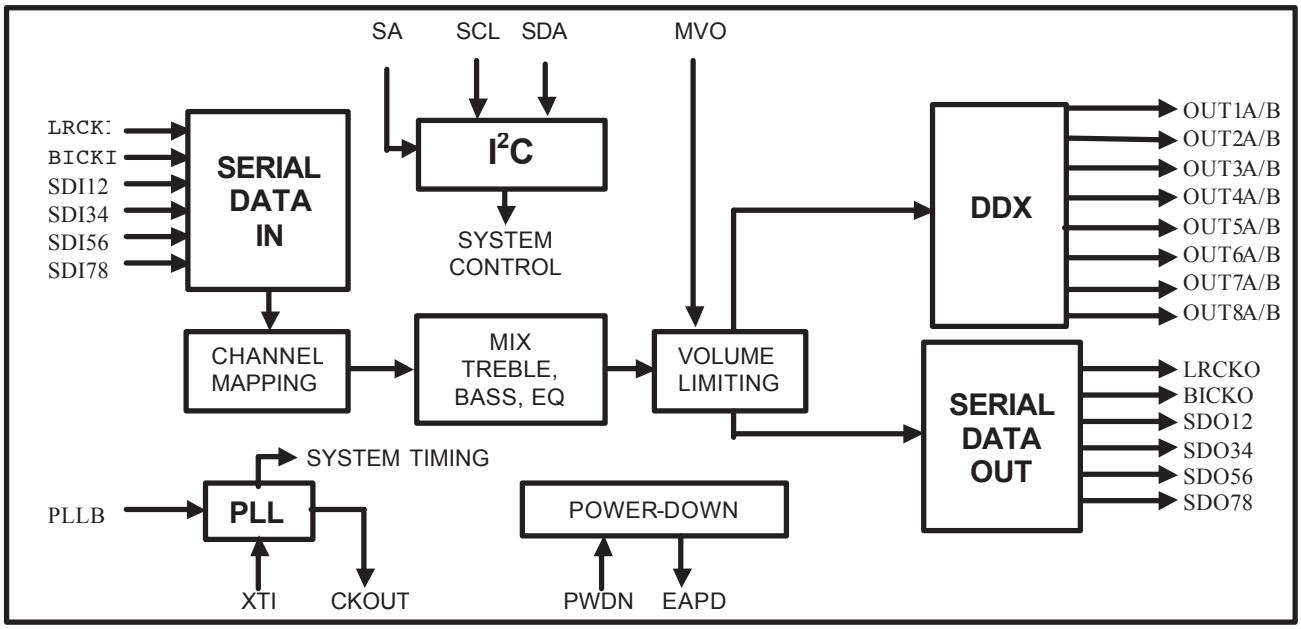

■ PIN ASSIGNMENTS (TOP VIEW)

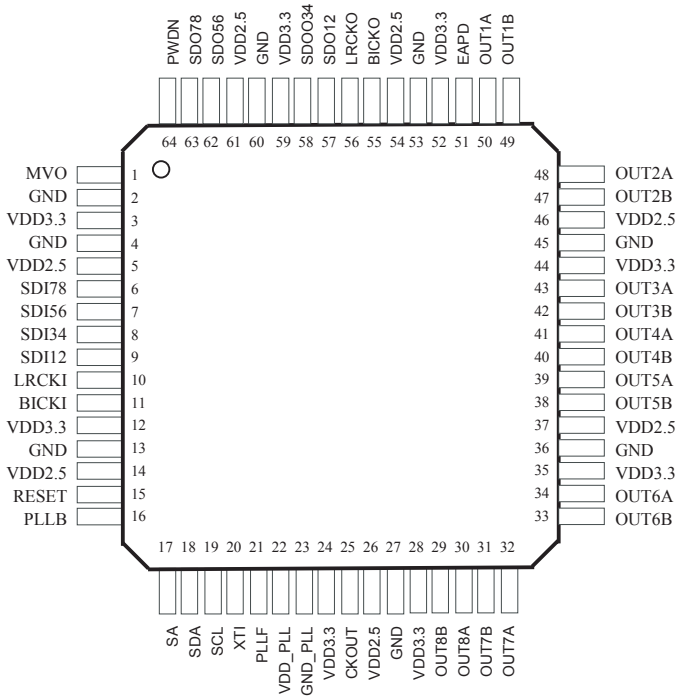

NJM 2296M (VIDEO S/W : IC16)

■ BLOCK DIAGRAM

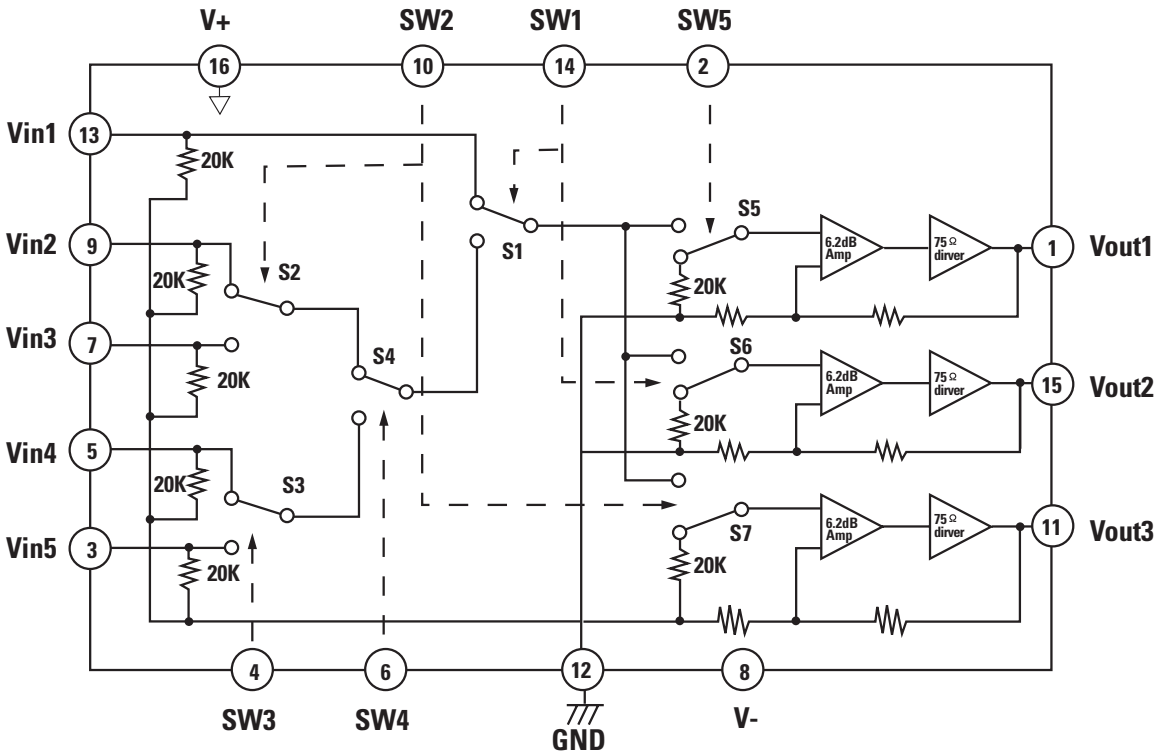

∗ Normally mute
Above circuits show that the switches are set at low.

■ PIN DESCRIPTIONS

<table>
<tr><th>Name</th><th>Number</th><th>I/O</th><th>Definition</th></tr>
<tr><td>VEE</td><td>1,18, 27, 59, 68, 75, 92, 99, 104, 130, 148, 157, 159, 164, 183, 193, 201</td><td>I</td><td>I/O power supply.</td></tr>
<tr><td>VSS</td><td>8, 17, 26, 34, 43, 52, 60, 67, 76, 84, 91, 98, 103, 112, 120, 129, 138, 147, 156, 163, 171, 177, 184, 192, 200, 208</td><td>I</td><td>GROUND.</td></tr>
<tr><td>LA[21:0]</td><td>23:19, 16:10, 7:2, 207:204</td><td>O</td><td>Device address output.</td></tr>
<tr><td>VCC</td><td>9, 35, 44, 83, 121, 139, 172</td><td>I</td><td>power supply.</td></tr>
<tr><td>RESET#</td><td>24</td><td>I</td><td>Core power supply.</td></tr>
<tr><td>TDMDX</td><td rowspan="2">25</td><td>O</td><td>TDM transmit data.</td></tr>
<tr><td>RSEL</td><td>I</td><td>ROM Select.
<table><tr><th>RSEL</th><th>Selection</th></tr><tr><td>0</td><td>16-bit ROM</td></tr><tr><td>1</td><td>8-bit ROM</td></tr></table></td></tr>
<tr><td>TDMDR</td><td>28</td><td>I</td><td>TDM receive data.</td></tr>
<tr><td>TDMCLK</td><td>29</td><td>I</td><td>TDM clock input.</td></tr>
<tr><td>TDMFS</td><td>30</td><td>I</td><td>TDM frame sync.</td></tr>
<tr><td>TDMTSC#</td><td>31</td><td>O</td><td>TDM output enable.</td></tr>
<tr><td>TWS</td><td></td><td>O</td><td>Audio transmit frame sync.</td></tr>
<tr><td>SEL_PLL2</td><td>I

32</td><td></td><td>System and DSCK output clock frequency selection is made at the rising edge of RESET#. The matrix below lists the available clock frequencies and their respective PLL bit settings.
<table><tr><th>SEL_PLL2</th><th>SEL_PLL1</th><th>SEL_PLL0</th><th>Clock Type</th></tr><tr><td>0</td><td>0</td><td>0</td><td>VCO off.</td></tr><tr><td>0</td><td>0</td><td>1</td><td>DCLK</td></tr><tr><td>0</td><td>1</td><td>0</td><td>Bypass mode</td></tr><tr><td>0</td><td>1</td><td>1</td><td>DCLK x 2</td></tr><tr><td>1</td><td>0</td><td>0</td><td>DCLK x 4.5</td></tr><tr><td>1</td><td>0</td><td>1</td><td>DCLK x 3</td></tr><tr><td>1</td><td>1</td><td>0</td><td>DCLK x 3.5z</td></tr><tr><td>1</td><td>1</td><td>1</td><td>DCLK x 4</td></tr></table></td></tr>
<tr><td>TSD0</td><td rowspan="2">33</td><td>O</td><td>Audio transmit serial data port 0.</td></tr>
<tr><td>SEL_PLL0</td><td>I</td><td>Refer to the description and matrix for SEL_PLL2 pin 32.</td></tr>
<tr><td>TSD1</td><td rowspan="2">36</td><td>O</td><td>Audio transmit serial data port 1.</td></tr>
<tr><td>SEL_PLL1</td><td>I</td><td>Refer to the description and matrix for SEL_PLL2 pin 32.</td></tr>
<tr><td>TSD[2]</td><td>37</td><td>O</td><td>Audio transmit serial data output 2.</td></tr>
<tr><td>TSD[3]</td><td>38</td><td>O</td><td>Audio transmit serial data output 3.</td></tr>
</table>

<table>
<tr><th>Name</th><th>Number</th><th>I/O</th><th>Definition</th></tr>
<tr><td>MCLK</td><td>39</td><td>I/O</td><td>Audio master clock for audio DAC.</td></tr>
<tr><td>TBCK</td><td>40</td><td>O</td><td>Audio transmit bit clock.</td></tr>
<tr><td>SPDIF</td><td rowspan="2">41</td><td>O</td><td>S/PDIF output.</td></tr>
<tr><td>SEL_PLL3</td><td>I</td><td>Clock source select.
<table><tr><th>SEL_PLL3</th><th>Clock Source</th></tr><tr><td>0</td><td>Crystal oscillator</td></tr><tr><td>1</td><td>DCLK input</td></tr></table></td></tr>
<tr><td>NC</td><td>42, 48</td><td></td><td>No connect pins. Leave open.</td></tr>
<tr><td>RSD</td><td>45</td><td>I</td><td>Audio receive serial data.</td></tr>
<tr><td>RWS</td><td>46</td><td>I</td><td>Audio receive frame sync.</td></tr>
<tr><td>RBCK</td><td>47</td><td>I</td><td>Audio receive bit clock.</td></tr>
<tr><td>XIN</td><td>49</td><td>I</td><td>Crystal input.</td></tr>
<tr><td>XOUT</td><td>50</td><td>O</td><td>Crystal output.</td></tr>
<tr><td>AVEE</td><td>51</td><td>I</td><td>Analog power for PLL.</td></tr>
<tr><td>DMA[11:0]</td><td>66:61, 58:53</td><td>O</td><td>DRAM address bus [11:0].</td></tr>
<tr><td>DCAS#</td><td>69</td><td>O</td><td>DRAM column address strobe.</td></tr>
<tr><td>DOE#</td><td rowspan="2">70</td><td>O</td><td>DRAM output enable.</td></tr>
<tr><td>DSCK_EN</td><td>O</td><td>DRAM clock enable.</td></tr>
<tr><td>DWE#</td><td>71</td><td>O</td><td>DRAM write enable.</td></tr>
<tr><td>DRAS#</td><td>72</td><td>O</td><td>DRAM row address strobe.</td></tr>
<tr><td>DMBS0</td><td>73</td><td>O</td><td>SDRAM bank select 0.</td></tr>
<tr><td>DMBS1</td><td>74</td><td>O</td><td>SDRAM bank select 1.</td></tr>
<tr><td>DB[15:0]</td><td>96:93, 90:85, 82:77</td><td>I/O</td><td>DRAM data bus [15:0].</td></tr>
<tr><td>DCS[1:0]#</td><td>97,100</td><td>O</td><td>SDRAM chip select [1:0].</td></tr>
<tr><td>DQM</td><td>101</td><td>O</td><td>Data input/output mask.</td></tr>
<tr><td>DSCK</td><td>102</td><td>O</td><td>Output clock to SDRAM.</td></tr>
<tr><td>DCLK</td><td>105</td><td>I</td><td>27 MHz clock input to PLL.</td></tr>
<tr><td>YUV0</td><td rowspan="3">106</td><td>O</td><td>YUV0 pixel output data.</td></tr>
<tr><td>CAMIN2</td><td>I</td><td>Camera input 2.</td></tr>
<tr><td>UDAC</td><td>O</td><td>Video DAC output.
<table><tr><th>Mode</th><th>YDAC</th><th>UDAC</th><th>VDAC</th><th>CDAC</th></tr><tr><td>A</td><td>Y</td><td>C</td><td>Composite</td><td>C</td></tr><tr><td>B</td><td>Y</td><td>Composite</td><td>Composite</td><td>C</td></tr><tr><td>C</td><td>Y</td><td>U</td><td>Composite</td><td>V</td></tr><tr><td>D</td><td>Y</td><td>U</td><td>C</td><td>V</td></tr></table>Y: Luma component for YUV and Y/C processing.
C: Chrominance signal for Y/C processing.
U: Chrominance component signal for YUV mode.
V: Chrominance component signal for YUV mode.</td></tr>
</table>

Name	Number	I/O	Definition
YUV1	107	O	YUV1 pixel output data.
VREF		I	Internal voltage reference to video DAC. Bypass to ground with 0.1 □F capacitor.
YUV2	108	O	YUV2 pixel output data.
CDAC		O	Video DAC output. Refer to description and matrix for UDAC pin 106.
YUV3	109	O	YUV3 pixel output data.
COMP		I	Compensation input. Bypass to ADVEE with 0.1 □F capacitor.
YUV4	110	O	YUV4 pixel output data.
RSET		I	DAC current adjustment resistor input.
ADVEE	111	I	Analog power for video DAC.
YUV5	113	O	YUV5 pixel output data.
YDAC		O	Video DAC output. Refer to description and matrix for UDAC pin 106.
YUV6	114	O	YUV6 pixel output data.
VDAC		O	Video DAC output. Refer to description and matrix for UDAC pin 106.
YUV7	115	O	YUV7 pixel output data.
CAMIN3		I	Camera YUV 3.
PCLK2XSCN	116	I/O	27-MHz video output pixel clock.
CAMIN4		I	Camera YUV 4.
PCLKQSCN	117	O	13.5-MHz video output pixel clock.
CAMIN5		I	Camera YUV 5.
VSYNC#	118	I/O	Vertical sync, active low.
CAMIN6		I	Camera YUV 6.
HSYNC#	119	I/O	Horizontal sync, active low.
CAMIN7		I	Camera YUV 7.
HD[5:0]	127:122	I/O	Host data I/O [5:0].
DCI[5:0]		I/O	DVD channel data I/O [5:0].
AUX1[5:0]		I/O	Aux1 data I/O [5:0].
HD[6]	128	I/O	Host data I/O [6].
DCI[6]		I/O	DVD channel data I/O [6].
AUX1[6]		I/O	Aux1 data I/O [6].
VFD_DOUT		I	VFD data output.
HD[7]	131	I/O	Host data I/O [7].
DCI[7]		I/O	DVD channel data I/O [7].
AUX1[7]		I/O	Aux1 data I/O [7:0].
VFD_DIN		I	VFD data input.
HD[8]	132	I/O	Host data bus 8.
DCI_FDS#		I/O	DVD input sector start.
AUX2[0]		I/O	Aux2 data I/O 0.
VFD_CLK		I	VFD clock input.
HD[9]	133	I/O	Host data bus line 9.
AUX2[1]		I/O	Aux2 data I/O [1] when selected.
SQSQ		I	Subcode-Q data.
HD[10]	134	I/O	Host data bus line10.
AUX2[2]		I/O	Aux2 data I/O [2] when selected.
SQSK		I	Subcode-Q clock.

Name	Number	I/O	Definition
HD[11]	135	I/O	Host data bus line11.
AUX2[3]		I/O	Aux2 data I/O [3] when selected.
IRQ		O	IRQ output.
HD[12]	136	I/O	Host data bus line12.
AUX2[4]		I/O	Aux2 data I/O [4] when selected.
C2PO		I	C2PO error correction flag from CD-ROM.
HD[13]	137	I/O	Host data bus line13.
AUX2[5]		I/O	Aux2 data I/O [5] when selected.
SP		I	16550 UART serial port input.
HD[14]	140	I/O	Host data bus line14.
AUX2[6]		I/O	Aux2 data I/O [6] when selected.
SQSI		I	Subcode-Q sync.
HD[15]	141	I/O	Host data bus line15.
AUX2[7]		I/O	Aux2 data I/O [7] when selected.
IR		I	IR remote control input.
HWRQ#	142	O	Host write request.
DCI_REQ#		O	DVD control interface request.
AUX4[1]		I/O	Aux4 data I/O 1.
HRRQ#	143	O	Host read request.
AUX4[0]		I/O	Aux4 data I/O 0.
HIRQ	144	I/O	Host interrupt.
DCI_ERR#		I/O	DVD channel data error.
AUX4[7]		I/O	Aux4 data I/O 7.
HRST#	145	O	Host reset.
AUX3[5]		I/O	Aux3 data I/O 5.
HIORDY	146	I	Host I/O ready.
AUX3[3]		I/O	Aux3 data I/O 3.
HWR#	149	I/O	Host write.
DCI_CLK		I/O	DVD channel data clock.
AUX4[5]		I/O	Aux4 data I/O 5.
HRD#	150	O	Host ea rd.
DCI_ACK#		O	DVD channel data valid.
AUX4[6]		I/O	Aux4 data I/O 6.
HIOCS16#	151	I	Device 16-bit data transfer.
CAMCLK		I	Camera port pixel clock input.
AUX3[4]		I/O	Aux3 data I/O 4.
HCS1FX#	152	O	Host select 1.
AUX3[7]		I/O	Aux3 data I/O 7.
HCS3FX#	153	O	Host select 3.
AUX3[6]		I/O	Aux3 data I/O 6.
HA[2:0]	158, 155:154	I/O	Host address bus.
AUX4[4:2]		I/O	Aux4 data I/Os [4:2].
AUX[1:0]	160	I/O	Auxiliary ports 1:0.

■ PIN ASSIGNMENTS (TOP VIEW)

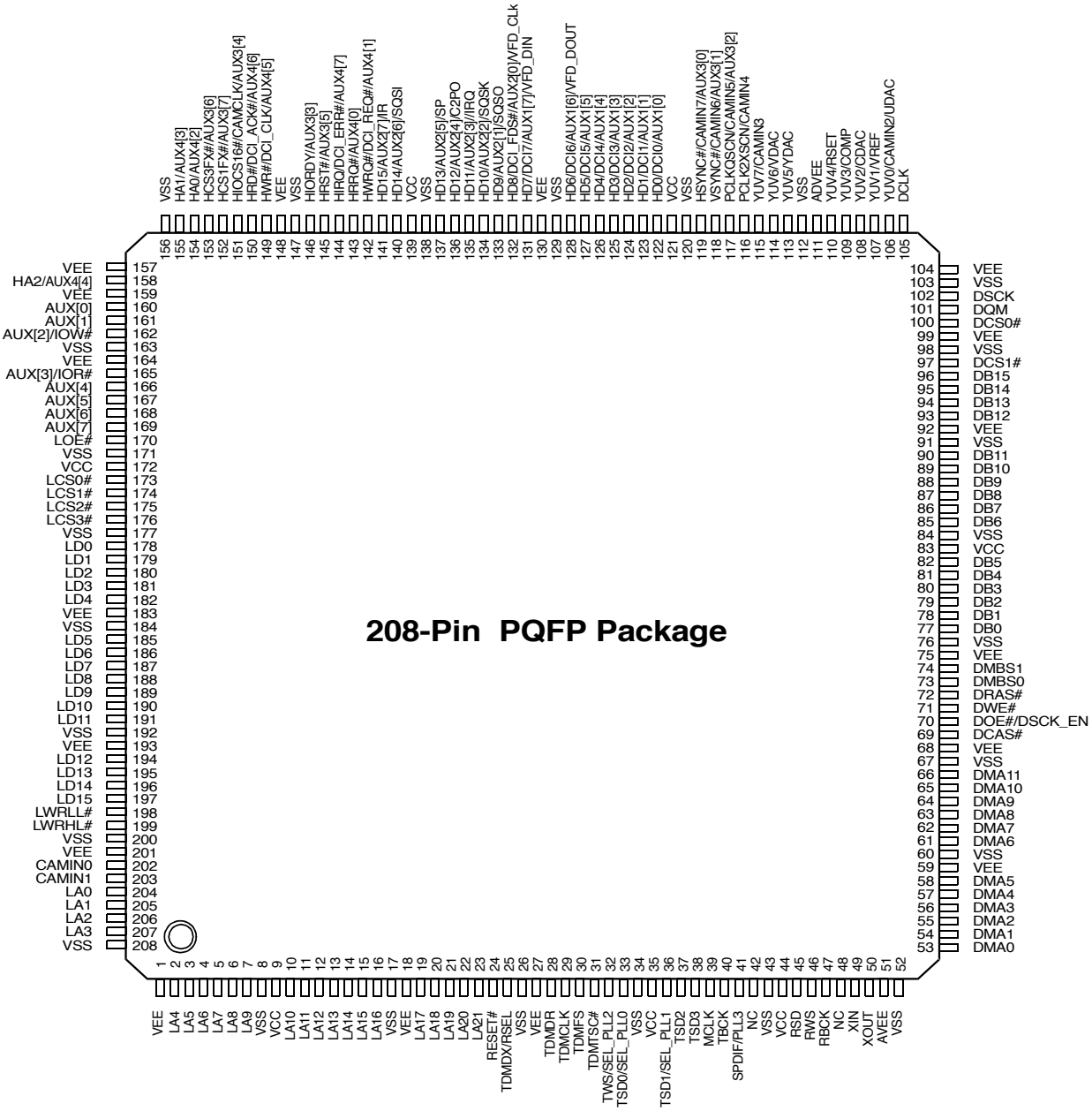

■ BLOCK DIAGRAM

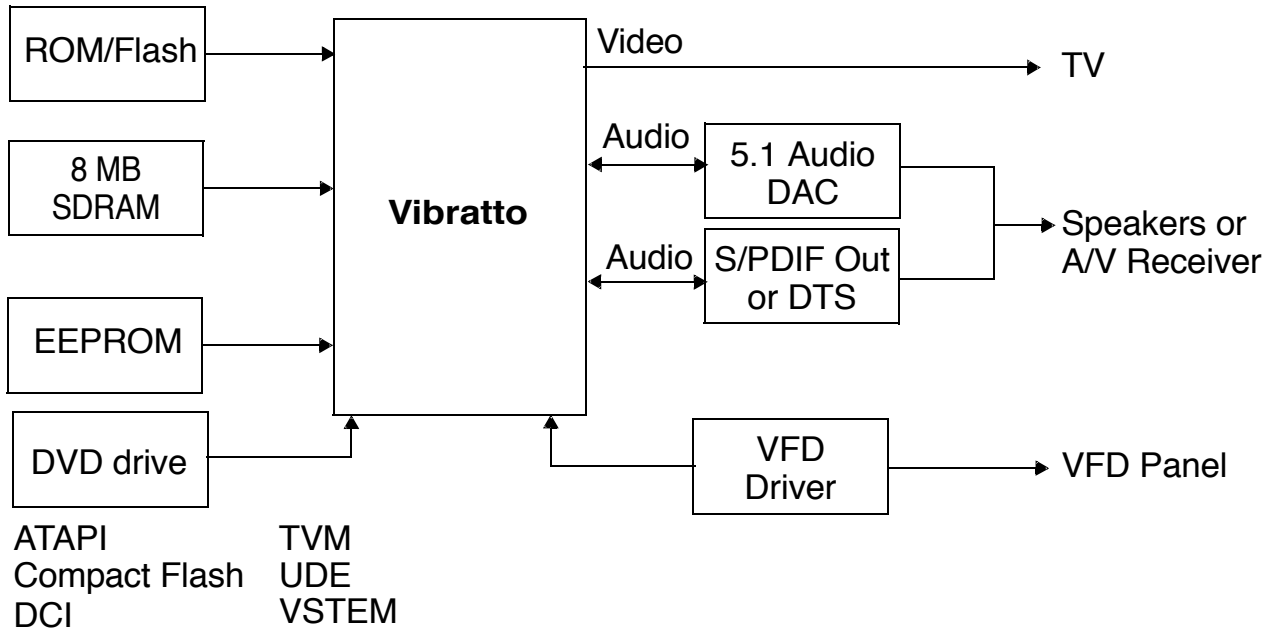

HY29LV160BT (FLASH MEMORY : IC11)

■ BLOCK DIAGRAM

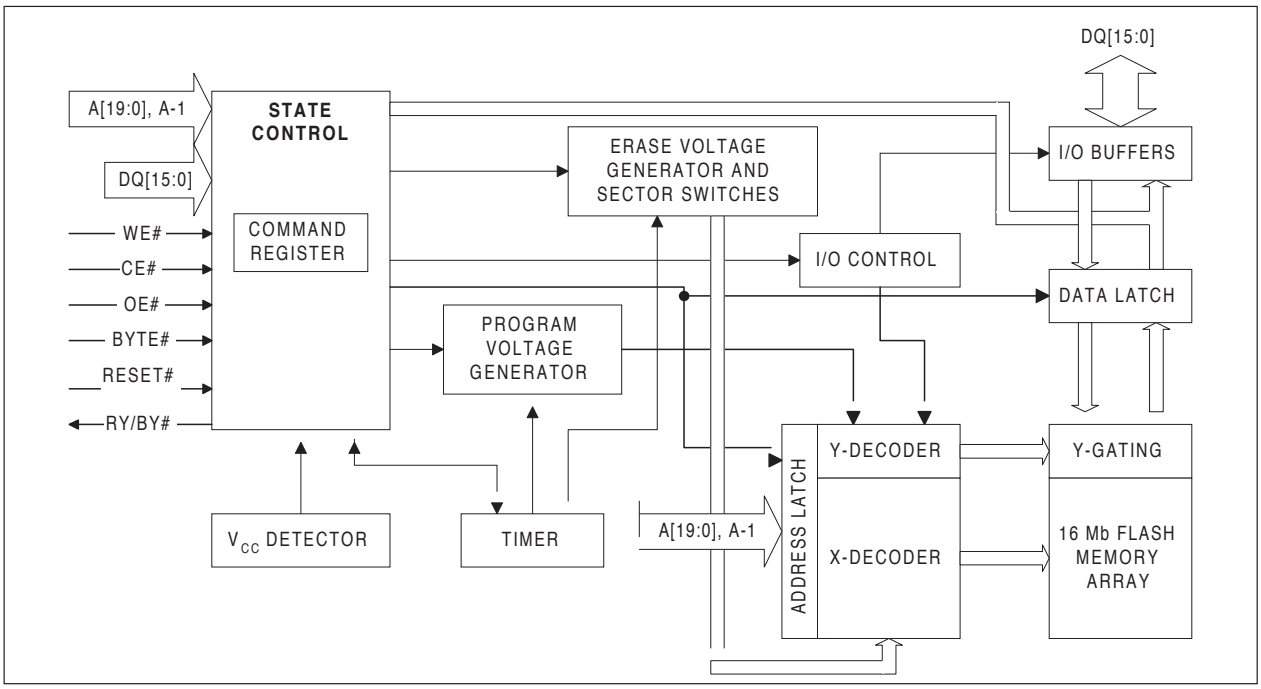

■ PIN ASSIGNMENTS (TOP VIEW)

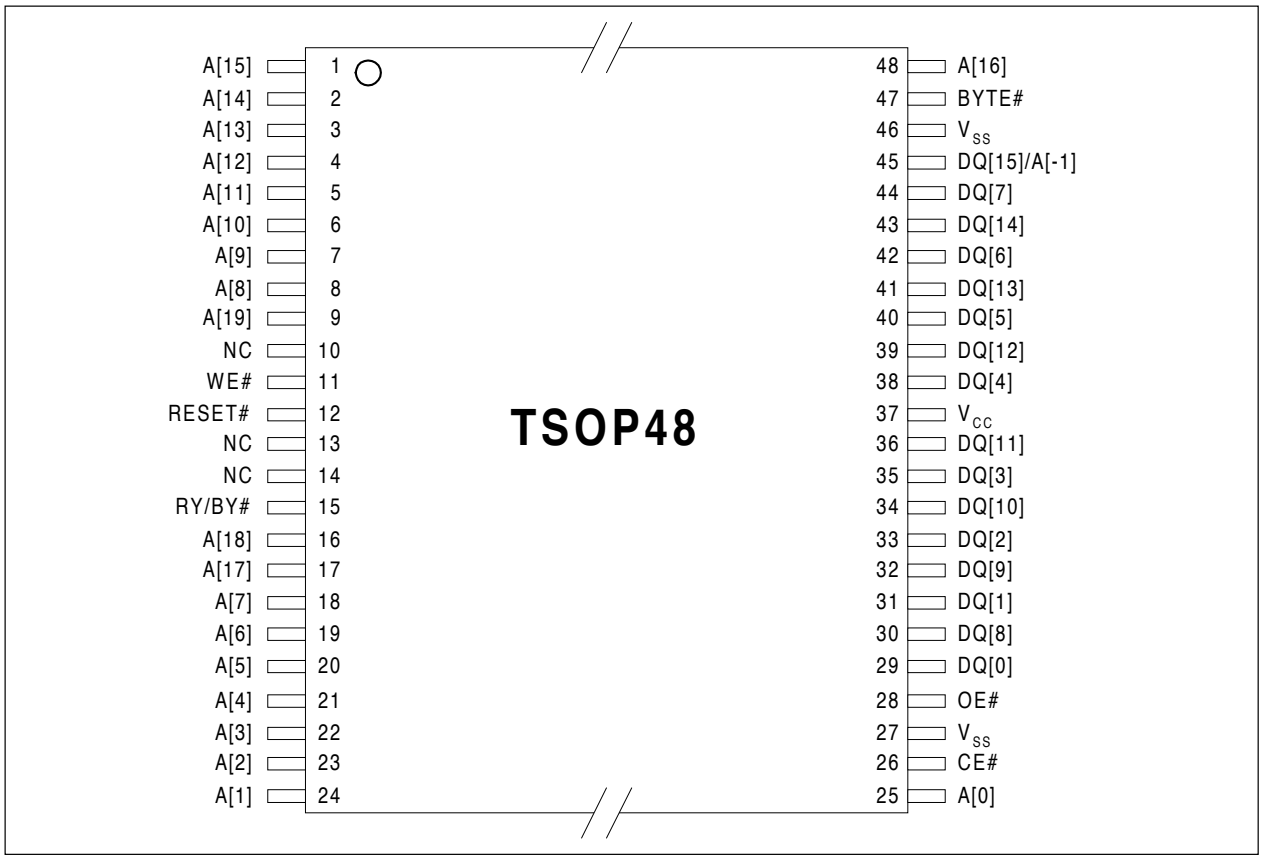

PCM1801U (A-D CONVERTER : IC41)

■ PIN ASSIGNMENTS (TOP VIEW)

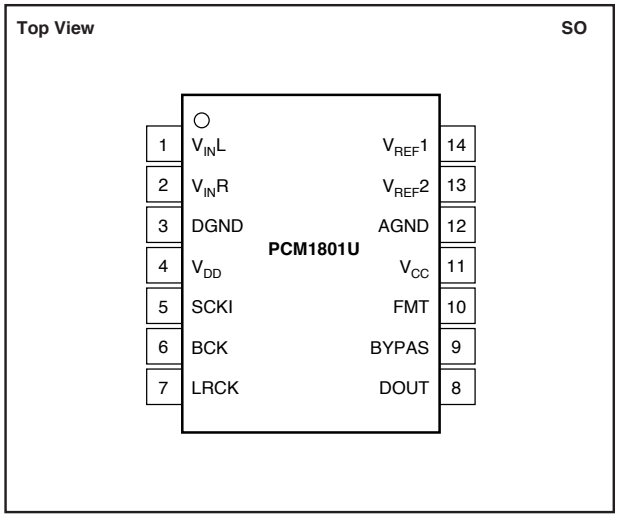

■ PIN DESCRIPTIONS

PIN	NAME	I/O	DESCRIPTION
1	$V_{IN}L$	IN	Analog Input, Lch.
2	$V_{IN}R$	IN	Analog Input, Rch.
3	DGND	□	Digital Ground
4	V_{DD}	□	Digital Power Supply
5	SCKI	IN	System Clock Input; $256f_S$, $384f_S$, or $512f_S$.
6	BCK	IN	Bit Clock Input
7	LRCK	IN	Sampling Clock Input
8	DOUT	OUT	Audio Data Output
9	BYPAS	IN	HPF Bypass Control(1) L: HPF Enabled H: HPF Disabled
10	FMT	IN	Audio Data Format(1) L: MSB-First, Left-Justified H: MSB-First, I²S
11	V_{CC}	□	Analog Power Supply
12	AGND	□	Analog Ground
13	$V_{REF}2$	□	Reference 2 Decoupling Capacitor
14	$V_{REF}1$	□	Reference 1 Decoupling Capacitor

■ BLOCK DIAGRAM

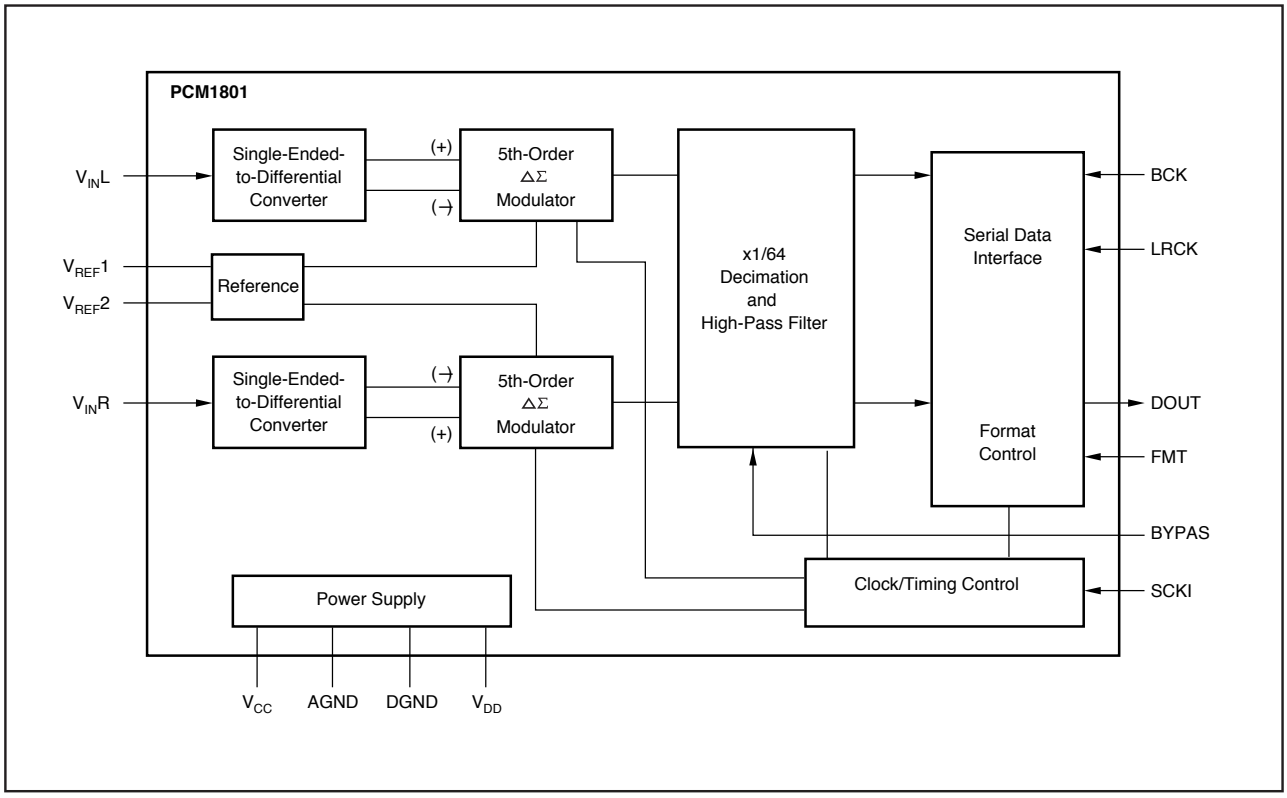

HY57V641620D (64M SDRAM : IC51)

■ PIN ASSIGNMENTS (TOP VIEW)

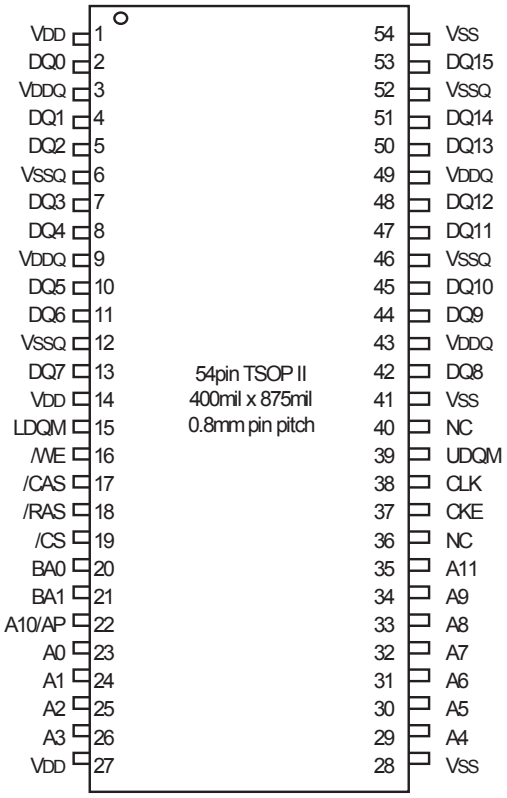

■ PIN DESCRIPTIONS

PIN	PIN NAME	DESCRIPTION
CLK	Clock	The system clock input. All other inputs are registered to the SDRAM on the rising edge of CLK
CKE	Clock Enable	Controls internal clock signal and when deactivated, the SDRAM will be one of the states among power down, suspend or self refresh
$\overline{CS}$	Chip Select	Enables or disables all inputs except CLK, CKE and DQM
BA0,BA1	Bank Address	Selects bank to be activated during $\overline{RAS}$ activity Selects bank to be read/written during $\overline{CAS}$ activity
A0 ~ A11	Address	Row Address : RA0 ~ RA11, Column Address : CA0 ~ CA7 Auto-precharge flag : A10
$\overline{RAS}$, $\overline{CAS}$, $\overline{WE}$	Row Address Strobe, Column Address Strobe, Write Enable	$\overline{RAS}$, $\overline{CAS}$ and $\overline{WE}$ define the operation Refer function truth table for details
LDQM, UDQM	Data Input/Output Mask	Controls output buffers in read mode and masks input data in write mode
DQ0 ~ DQ15	Data Input/Output	Multiplexed data input / output pin
VDD/VSS	Power Supply/Ground	Power supply for internal circuits and input buffers
VDDQ/VSSQ	Data Output Power/Ground	Power supply for output buffers
NC	No Connection	No connection

■ BLOCK DIAGRAM

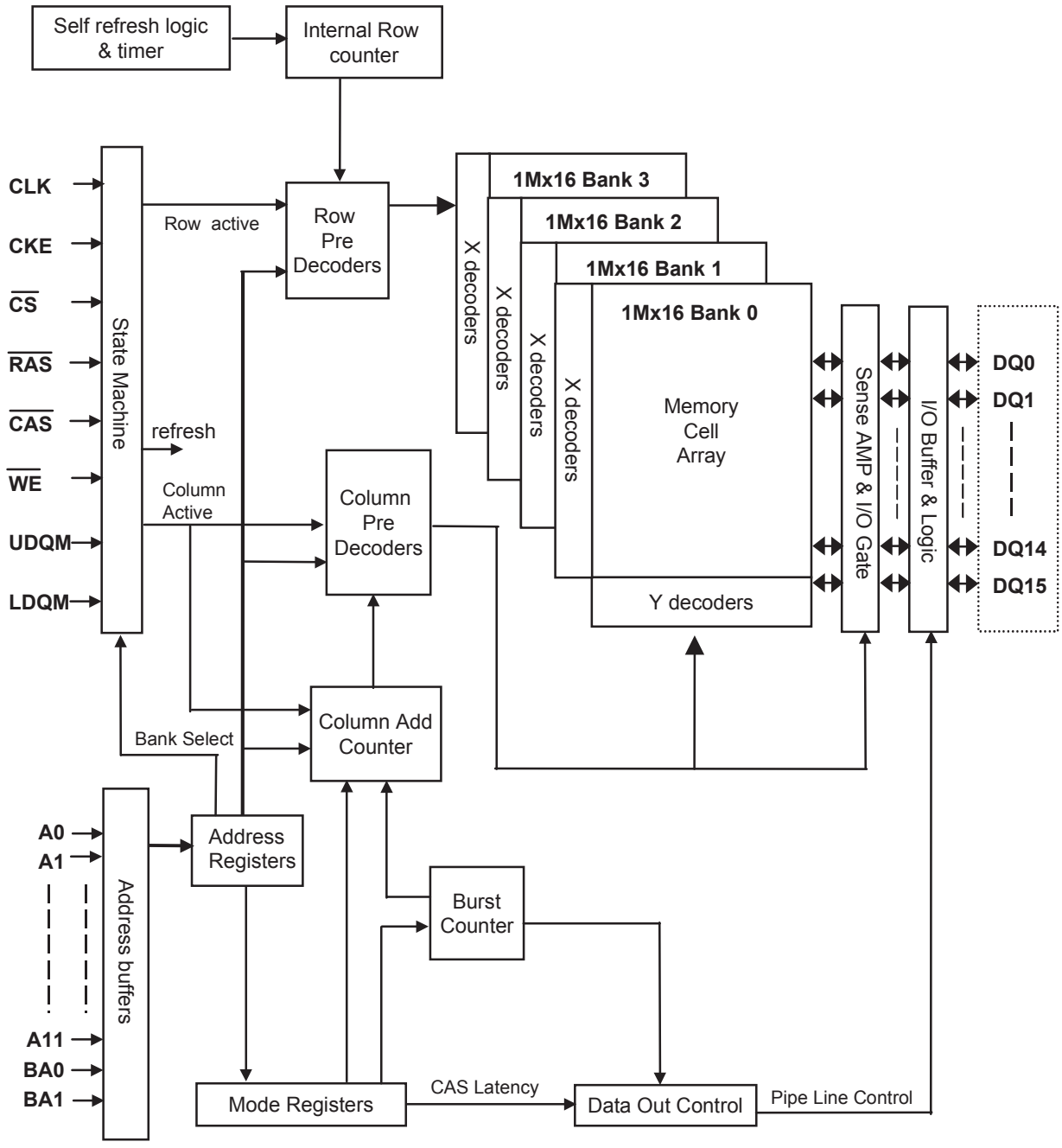

BR24C16F (EEPROM : IC21)

■ PIN ASSIGNMENTS (TOP VIEW)

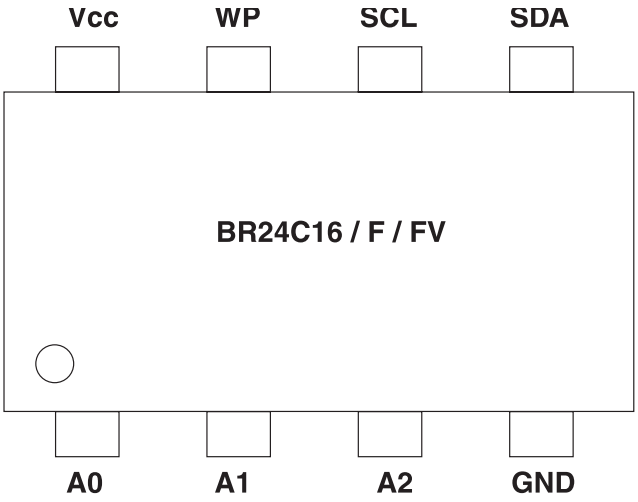

■ PIN DESCRIPTIONS

Pin name	I / O	Function
Vcc		Power supply
GND		Ground (0V)
A0, A1, A2	I	Out of use. Please connect to GND.
SCL	I	Serial clock input
SDA	I / O	Slave and word address, serial data input, serial data output
WP	I	Wite protect pin

* 1 An open drain output requires a pull-up resistor.

■ BLOCK DIAGRAM

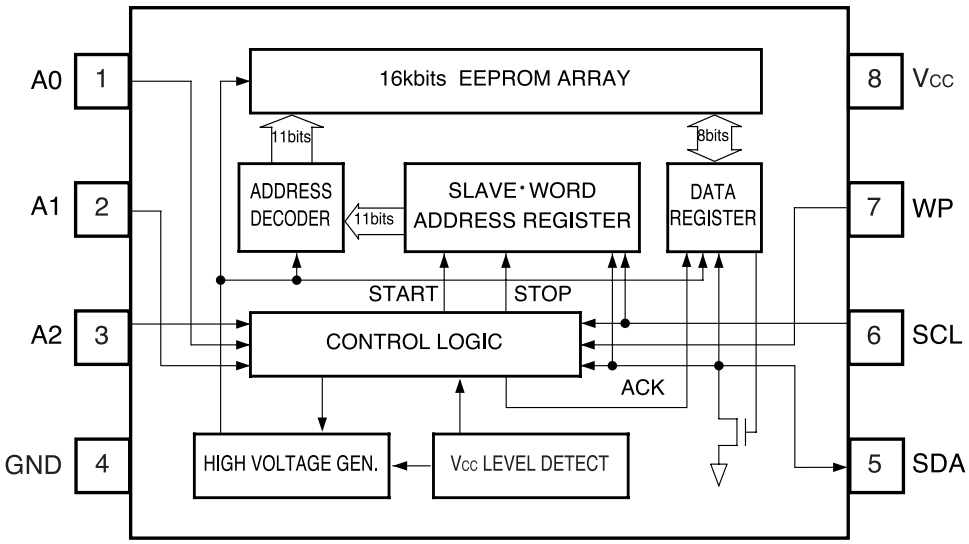

LC75725E (VFD DRIVER : IC74)

■ BLOCK DIAGRAM

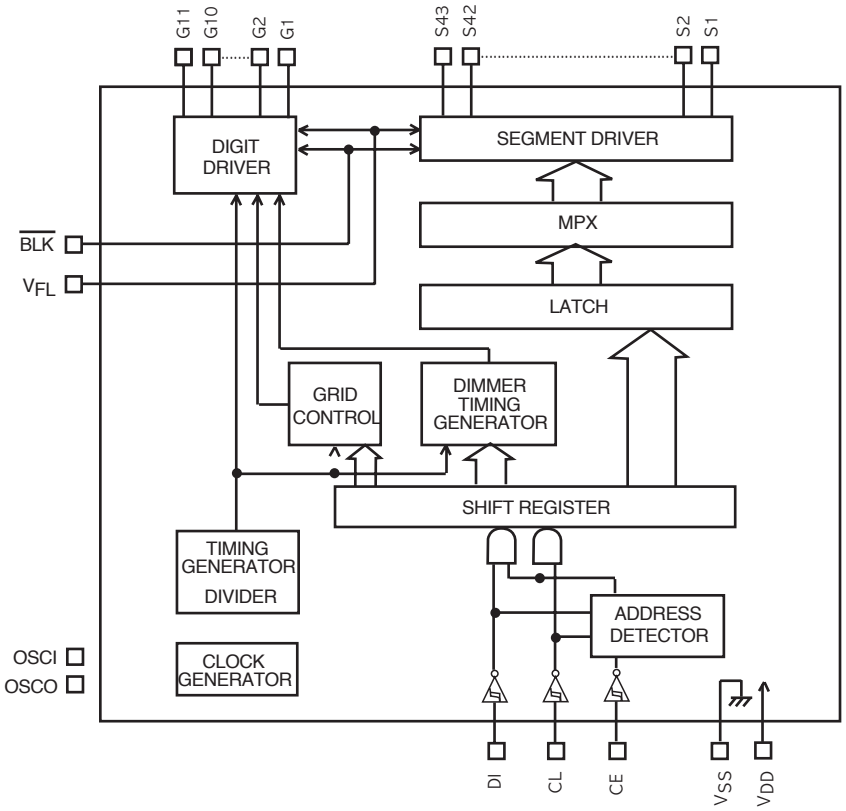

■ PIN ASSIGNMENTS (TOP VIEW)

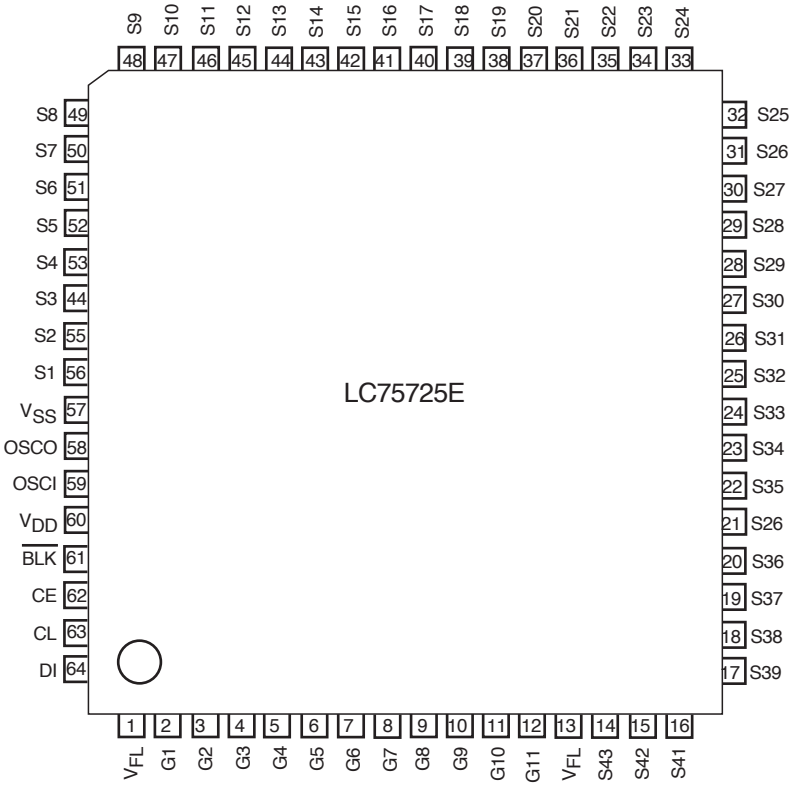

IC INTERNAL DIAGRAMS (VCR PART)

MICOM (M37762MCA-xxxGP : IC31)

■ **PIN DESCRIPTIONS**

PIN No.	Port	I/O	Pin Name	DESCRIPTION	ACTIVE
1	P11/AN8	IN	ST SENEOR	TAPE START SENSOR DATA INPUT	A/D
2	P77/AN7	IN	OPTION		
3	P76/AN6	OUT	CAP F/R(H)	CAPSTAN MOTOR FWD/RVS H/L	
4	P75/AN5	IN	POWER FAIL	POWER FAIL PORT LOW	
5	P74/AN4	OUT	PG DELAY	PG DELAY ADJUST A/D	
6	P73/AN3	IN	END SENSOR	TAPE END SENSOR DATA INPUT A/D	
7	P72/AN2	IN	PATH ADJ	USE FOR PATH ADJUST A/D	
8	P71/AN1	IN	AFT	AFT INPUT PORT A/D	
9	P70/AN0	IN	V. ENVE	VIDEO DC ENVE DETECT INPUT A/D	
10	P67/AN10	IN	A. ENVE	AUDIO DC ENVE DETECT INPUT A/D	
11	P66/RTP11	OUT	CAP. LIMIT	CAPSTAN I.CONTROL IN PB STILL MODE ,LOW OUTPUT(CAPSTAN MOTOR STOP)	LOW
12	P65/RTP10	NC			
13	P64/RTP03	OUT	Q.V SYNC	Q.V SYNC OUTPUT PULSE	
14	P63/RTP02	IN	REMOCON IN	REMOCON DATA INPUT PORT(HOST→VCR)	PULSE
15	P62/EXOR OUT1 (C.ROT)	OUT	C.ROTARY	COLOR ROTARY, 2HD : SW PULSE, 4HD : IN SPECIAL PB MODE, PULSE OUTPUT(Exclusive or output of ENVE COMPARE ANDV. SW PULSE	PULSE
16	P62/EXOR OUT0 (HASW)	OUT	H.A SW	HEAD AMP SWITCHING PULSE, 2HD : 0V, 4HD : IN SPATIAL PB MODE, Pulse output in case of 4HD	PULSE
				PLAY / PB.STILL / CUE/REV	
				LP / HIGH / V. SW / HIGH	
				SP / LOW / V. SW / ENVE COM	
				IF H.A SWP IS HIGH, EP HEAD SPELECTED	
17	P60/EXOR IN IN (ENVS)		ENVE/COMP	ENVELOPE COMPARE DETECT INPUT AUTO TRACKING DETECTOR	PULSE
18	P57/RTP01	OUT	H.SW PULSE	VIDEO SWITCHING	PULSE
19	P57/RTP00	OUT	Hi-Fi A.H.SW	AUDIO SWITCHING	PULSE
20	P55/RTP25	IN	REC. SAFETY	REC SAFETY SW DATA IN	LOW
21	P54/RTP24		NC		
22	P53/RTP23		GND		
23	P52/RTP22	OUT	S-ENABLE	S-ENABLE DATA PORT(TO HOST)	SERIAL
24	P51/RTP21	OUT	DATA OUT	VCR DATA OUT(POWER DATA TO HOST)	SERIAL
25	P50/RTP20		NC		
26	P47	OUT	OP1	OP:NT(G:ON),PAL(SH:ON)	
27	P46	OUT	OP2	OP:NT(DOM:ON),PAL(PDC:ON/VPS:OFF)	
28	P45	OUT	OP3	OP:PAL(VPS,PDC:ON/NOR:OFF)	
29	P44	OUT	OP4	OP:PAL(ENG:ON,GER:OFF)	
30	P43		NC		
31	P42	OUT	EHB	TO VPS IC 10P(PAL ONLY)	PULSE
32	P41		NC		
33	P40	NC	PWR CTL	VPS/PDC CIRCUIT ALL POWER CONTROL(L) L/H	
34	RESET(L)	IN	RESET	RESET INPUT PORT	LOW
35	P31/XCIN	IN	OSC 1 IN	16MHz OSC IN	-
36	P30/XCOUT	OUT	OSC 1 OUT	16MHz OSC OUT	-

PIN No.	Port	I/O	Pin Name	DESCRIPTION	ACTIVE
37	VCC		VCC	VCC +5V	
38	X IN	IN	OSC 2 IN	32.76816MHz OSC IN	-
39	X OUT	OUT	OSC 2 OUT	32.76816MHz OSC OUT	-
40	VSS		VSS	GND	
41	P22/OSC IN3	IN	OSC 3 IN	14.318 MHz OSC IN	-
42	P21/OSC OUT3	OUT	OSC 3 OUT	14.318 MHz OSC OUT -	
43	CLKSEL	IN	CLK SEL	GND	
44	P20/OSC	IN		NC	
45	P20/OSC OUT2	OUT		NC	
46	NUB		GND		
47	P16/LP			REFERENCE TO OSD CIRCUIT	
48	P15/FSC IN	OUT	POWER ON/OFF	POWER ON/OFF CONTROL PORT(L)	L/H
49	OSDVSS		OSD GND	GND	
50	P14/CVIN	IN	CVBS IN	SCOMPOSITE VIDEO INPUT PORT	
51	P13/LECHA				
52	P14/CVOUT	OUT	CVBS OUT	COMPOSITE VIDEO OUTPUT PORT	
53	OSDVCC		OSD VCC	VCC (REG +5V)	
54	P11/HLF			REFERENCE TO OSD CITCUIT	
55	P10/V_HOLD			REFERENCE TO OSD CITCUIT	
56	P07/CVIN	IN	EDS	COMPOSITE VIDEO INPUT PORT(CAPTION)	
57	NUA				
58	P06/H-SYNC	IN	C-SYNC	COLOR SYNCHRONIZING SIGNAL INPUT	
59	P05/V-SYNC	IN	C-SYNC	COLOR SYNCHRONIZING SIGNAL INPUT	
60	P04/OUT1			NC	
61	P03/OUT2			NC	
62	P02/B			NC	
63	P01/G	OUT	REC(H)	IN REC MODE, HIGH OUTPUT	HIGH
64	P00/R		NC		
65	P107/SOUT1			GND	
66	P106/SIN1	IN	CAM C	CAM DATA INPUT	
67	P105/SCLK1	OUT	PB(L)	IN PLAYBACK MODE LOW OUTPUT	LOW
68	P104/SOUT	OUT	SERIAL-OUT	SERIAL DATA OUT PORT(VCR°Ê HOST)	PULSE
69			NC		
70	P102/CLK 0B	OUT	SERIAL CLK	SERIAL CLOCK OUT PORT(HOST°Ê VCR)	PULSE
71	P101/CLK 0A	OUT	IIC CLOCK2	IIC CLOCK(VIDEO IC)	PULSE
72	P100/SDA	OUT	IIC DATA2	IIC DATA(VIDEO IC)	PULSE
73	P97/T5	OUT	IIC CLOCK1	IIC CLOCK(Hi-Fi/MPX/TUNER)	PULSE
74	P96	OUT	IIC DATA1	IIC DATA(Hi-Fi/MPX/TUNER)	PULSE
75	P95	OUT	TV/VCR(H)	TV/VCR MODE SWITCHING	L/H
76	P94/PWM1	OUT	D.PWM	DRUM CONTROL PWM OUT PULSE	
77	P93/PWM0	OUT	C.PWM	CAPSTAN CONTROL PWM OUT PULSE	
78	P92/INT0	OUT	A.MUTE(H)	VCR SOUND MUTE CONTROL	
79	P91/RLS	IN	S/R SENSOR	SUPPLY REEL PULSE INPUT	A/D
80	P91/RLT	IN	T/R SENSOR	TAKE UP REEL PULSE INPUT	A/D
81	P87	OUT	LM.F	LOADING MOTOR FORWARD	L/H

PIN No.	Port	I/O	Pin Name	DESCRIPTION				ACTIVE
82	P86	OUT	LM.R	LOADING MOTOR REVERSE				L/H
83	P85	IN	CAM A	CAM DATA INPUT				LOW
84	P84	IN	CAM B					LOW
66	P106	IN	CAM C	## MODE SWITCHING TABLE ##				LOW
86	P82	IN	CAM D	CAM A	CAM B	CAM C	CAM D	
				L	H	H	H	
				L	H	L	H	
				H	H	L	H	
				H	L	L	H	H/L
				H	H	H	L	
				H	L	H	L	
				H	H	H	H	
				H	L	H	H	
85	P82		GND	GND				
87	C.FG	IN	C.FG IN	CAPSTAN FG INPUT				PULSE
88	AMP VSS			AMP VSS				
89	P81	IN	D.FG IN	DRUM FG INPUT				PULSE
90	PDRPGIN	IN	D.PG IN	DRUM PG INPUT				PULSE
91	AMP REF OUT	OUT	AMP REF OUT	AMP REFERENCE OUT				-
92	AMP REF IN	IN	AMP REF IN	AMP REFERENCE IN				-
93	P80	CAP		REFERENCE TO CONTROL CIRCUIT				-
94	CTL-	OUT	CTL(-)	REFERENCE TO CONTROL CIRCUIT				-
95	CTL+	OUT	CTL(+)	REFERENCE TO CONTROL CIRCUIT				-
96	AMPC	OUT	AMP PC	REFERENCE TO CONTROL CIRCUIT				-
97	CTL AMP	OUT	CTL AMP	REFERENCE TO CONTROL CIRCUIT				-
98	AMP VCC			AMP VCC				
99	A. VCC			A. VCC				
100	GND			GND				

■ PIN ASSIGNMENTS (M37762MCA-xxxGP)

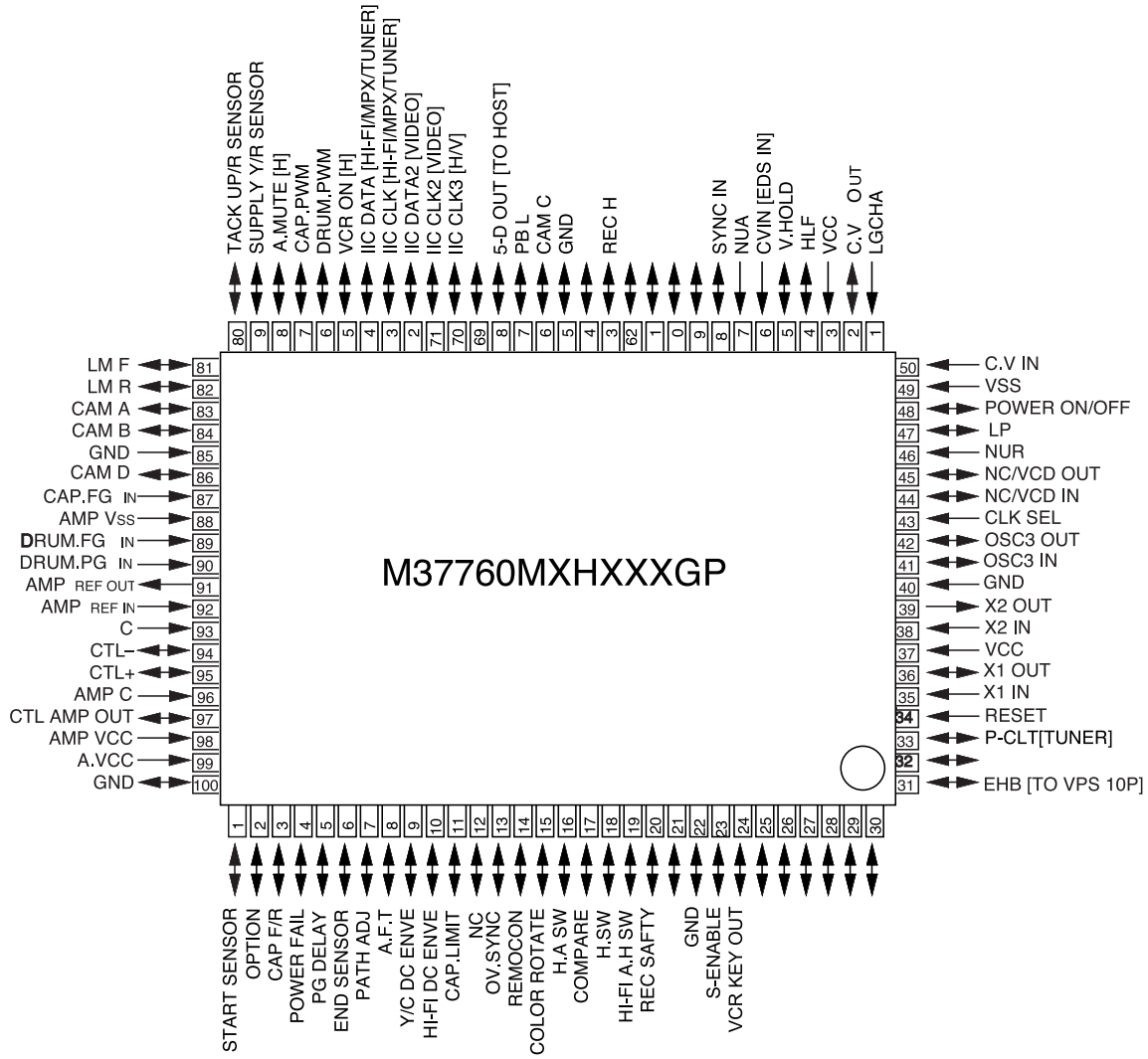

Note: Pin bearing an * incorporates an input pull-up resistor.

■ BLOCK DIAGRAM (M37762MCA-xxxGP)

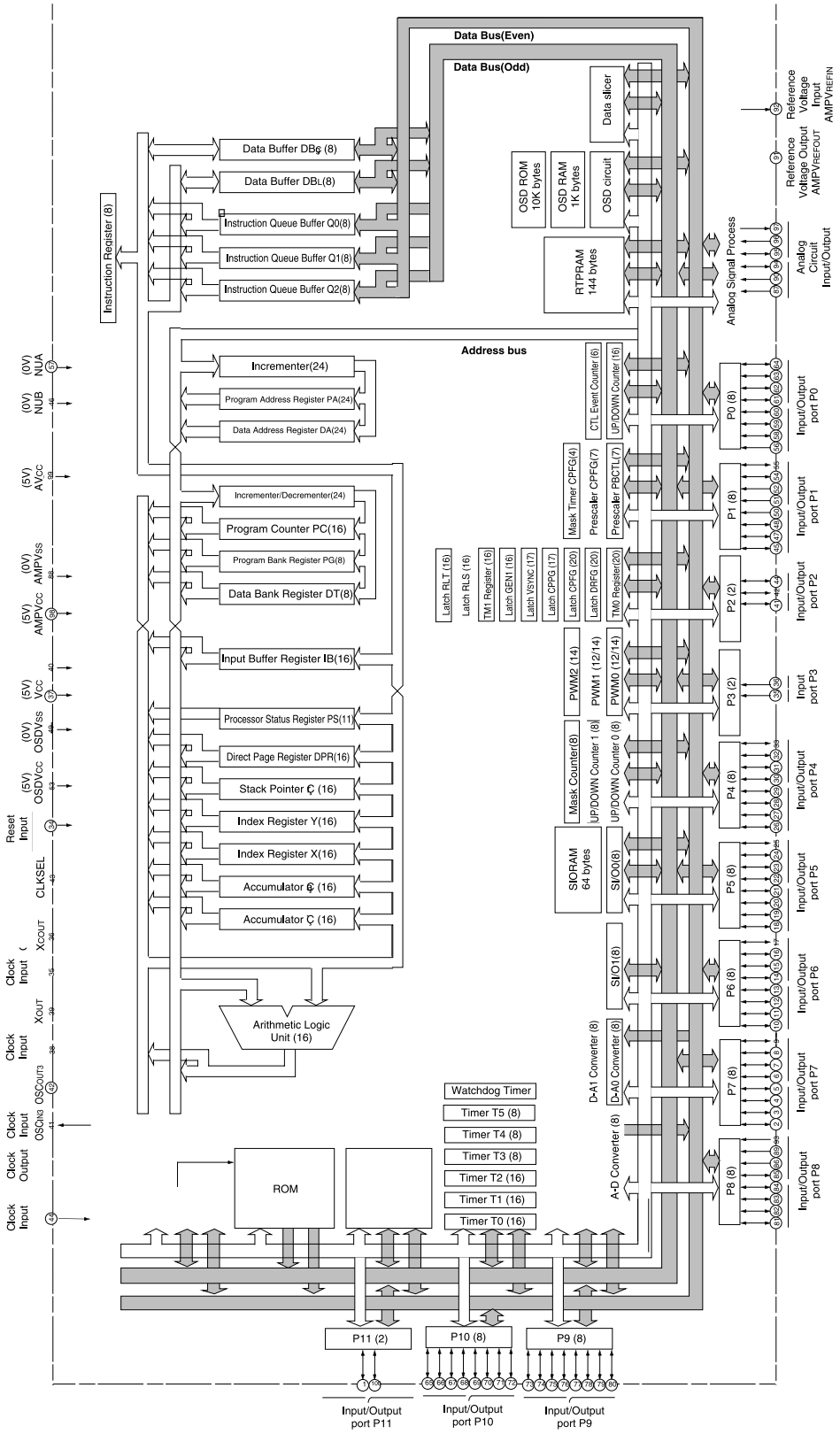

Loding Motor Driver IC (KA3082 : IC32)

■ PIN DESCRIPTIONS

Pin Number	Pin Name	I/O	Pin Function Description
1	GND	-	Ground
2	LM(-)	O	Output 1
3V	Z1	-	Phase Compensation
4	VR	I	MotorSpeed Control
5	F -IN	I	Input 1
6	R -IN	I	Input 2
7	VCC1	-	SupplyVoltage (Signal)
8	VCC2	-	SupplyVoltage (Power)
9V	Z2	-	Phase Compensation
10	LM(+)	O	Output 2

■ PIN ASSIGNMENTS

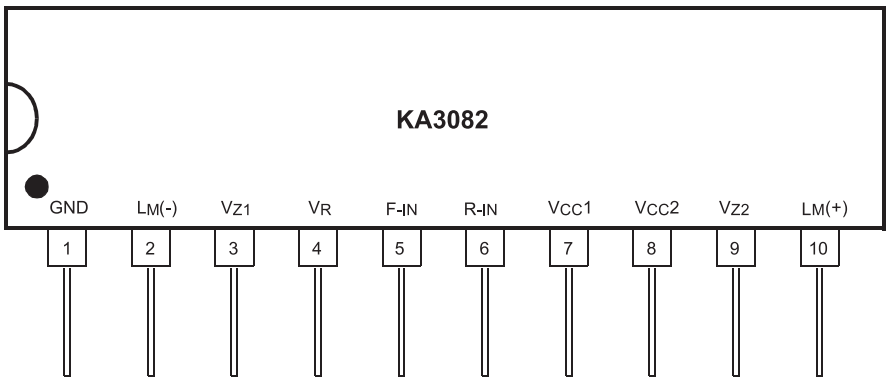

■ BLOCK DIAGRAM

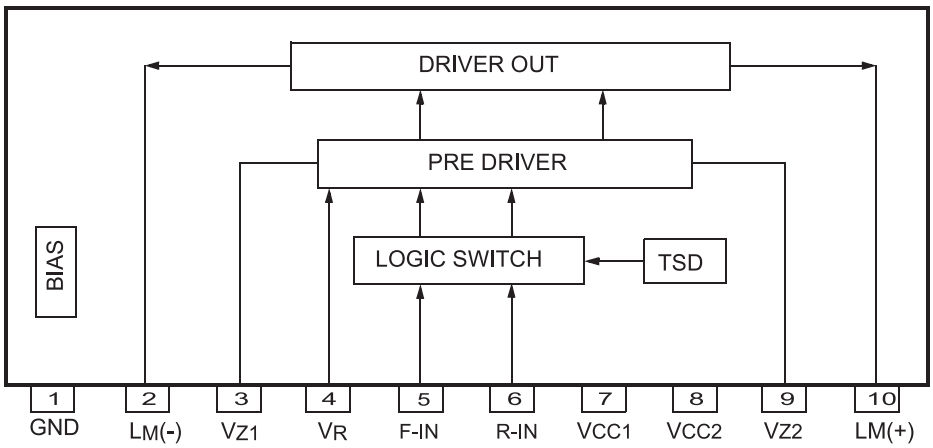

VIDEO + Y/C + HEAD AMP (LA71570 : IC41)

■ PIN DESCRIPTIONS

Pin No.	Pin Name	Standard DC Voltage		Note
		PB	REC	
1	EQ-OUT	2.5V(3.75V)	2.5V(3.75V)	
2	EQ-SW2	2.5V(3.75V)	2.5V(3.75V)	
3	EQ-NFB	2.5V(3.75V)	2.5V(3.75V)	
4	EQ-IN	2.5V(3.75V)	2.5V(3.75V)	
5	EQ-SW1	2.5V(3.75V)	2.5V(3.75V)	
6	AUTO-BIAS-IN	2.5V(3.75V)	2.5V(3.75V)	
7	AUTDIO-REC-OUT	2.5V(3.75V)	2.5V(3.75V)	
8	AUDIO-REC-NFB-SP	2.5V(3.75V)	2.5V(3.75V)	
9	AUDIO-REC-NFB-LP/EP	2.5V(3.75V)	2.5V(3.75V)	
10	A-MUTE/C-ROT			
11	RFSW/HASW			
12	PORECEQ		2.0V	
13	FM-AGC-FILT	1.7V	1.7V	
14	ACC-FILT	1.5V	1.5V	
15	REC-AGC-TC1		1.9V	
	PB-BALANCER	2.3V		
16	Y-VCC-5V	5V	5V	
17	PB-FM-IN2	3V	0.05V	
18	EMPHASIS-OUT	2.1V	2.1V	
19	MAIN-EMPHASIS-FILT	2.1V	2.1V	
20	CLAMP-IN	2.8V	2.8V	
21	MAIN-EMPHASIS-OUT	2.1V	2.1V	
22	Y-GND			
23	SERIAL DATA-IN			
24	SERIAL CLOCK-IN			
25	BLUE BACK-IN	1.8V	1.8V	
26	QV/QH-INS			
27	H.SYNC-OUT			
28	C.SYNC-OUT			
29	VIDEO-OUT	SYNC :0.8V	SYNC :0.8V	
30	PEQCTL	1.0V	0 OR 5V	
31	VIDEO AGC-IN	3.1V	3.1V	
32	VIDEO SW-OUT	1.8V	1.8V	
33	AGC-TC2	2.0V	2.0V	
34	VIDEO-IN3	1.8V	1.8V	
35	AFC2-FILT	3.5V	3.5V	
36	VIDEO-IN2	1.8V	1.8V	
37	SYNC DET-FILT	4.9V/NO SIG:0.3V	4.9V/NO SIG:0.3V	
38	VIDEO IN1	1.8V	1.8V	
39	REG4.0	4V	4V	
40	ALWAYS-5V	5.0V	5.0V	
41	1HDL-IN	2.7V	2.7V	
42	VCA-FILT	2.9V	2.9V	
43	VCA-OUT	1.9V	1.9V	
44	CCD-M-CTL	M(60Hz):4.3V -except above :low		
45	CCD-Y-IN	1.8V	1.8V	
46	CDD-Y-OUT	1.2V	1.2V	
47	RD	2.0V	2.0V	

Pin No.	Pin Name	Standard DC Voltage		Note
		PB	REC	
48	CCD-VCO-FILT	2.3V	2.3V	
49	CD-VCO-IN	1.2V	1.2V	
50	4FSC-OUT			
51	CCD-C-OUT	1.9V	1.9V	
52	CCD-C-IN1	2.4V	2.4V	
53	CCD-GND			
54	DDC-C-IN2	2.4V	2.4V	
55	CCD-VCC-5V	5.0V	5.0V	
56	CCD-NT-CRL+2fsc-OUT	NTSC:3.5V-except above :low		
57	C-DL-OUT	3.4V	3.4V	
58	C-VCC-5V	5.0V	5.0V	
59	C-0H-OUT	3.4V	3.4V	
60	SLD-FILT	3.5V	3.5V	
61	A-COMB-IN	3.3V	3.3V	
62	AFC/APC-FILT	3.5V	3.5V	
63	VXO/XO-IN1(3.58M NTSC)	4.0V	4.0V	
64	VXO/XO-OUT1	2.2V	2.2V	
65	REC-APC-FILT	2.4V	2.4V	
66	VXO/XO-OUT2	2.2V	2.2V	
67	VXO/XO-IN1(PAL BGI/MN)	4.0V	4.0V	
68	C-GND			
69	P/S-DET-FILT(PAL-M-DET-FILT)	SECAM/MESECAM :4.0V		
70	KILL-FILT	2.0V	2.0V	
71	PIREC-C	2.5V	2.5V	
72	REC-C-OUT	0.3V	2.5V	
73	P/S-DET-CTL(PAL-M-DET-CTL)	2.5V	2.5V	
74	POPBFMMN	2.0V		
75	A-VCC	5.0V	5.0V	
76	AUDIO IN	2.5V	2.5V	
77	ALC-DET			
78	AUDIO-IN2	2.5V	2.5V	
79	VREF	2.5V	2.5V	
80	AUDIO-IN3	2.5V	2.5V	
81	H.A GND			
82	PIPBSPL+	1.8V	4.1V	
83	PIPBSPL	1.8V	4.1V	
84	PIPBSPL-	1.8V	4.1V	
85	PIPBSPL+	1.8V	4.1V	
86	H.A GND			
87	H.A VCC	5.0V	5.0V	
88	PIPBEPL +	1.8V	4.1V	
89	PIPBEPL -	1.8V	4.1V	
90	PIPBEPH -	1.8V	4.1V	
91	PIPBEPH +	1.8V	4.1V	
92	PHRDTFL		1.6V	
93	POENVDET	0.5 ~ 4.9V		
94	PIRADJI	0.5 OR 4.5V	0.7V	
95	A.GND			
96	AUDIO LINE OUT	2.5V	2.5V	
97	ALC-IN	0.0V	0.0V	
98	AUDIO-REC-IN	2.5V	2.5V	
99	AUDIO-BIAS-OUT	5.0V	4.3V	
100	AUDIO-PB-IN	2.5V	2.5V	

■ BLOCK DIAGRAM (LA71570M)

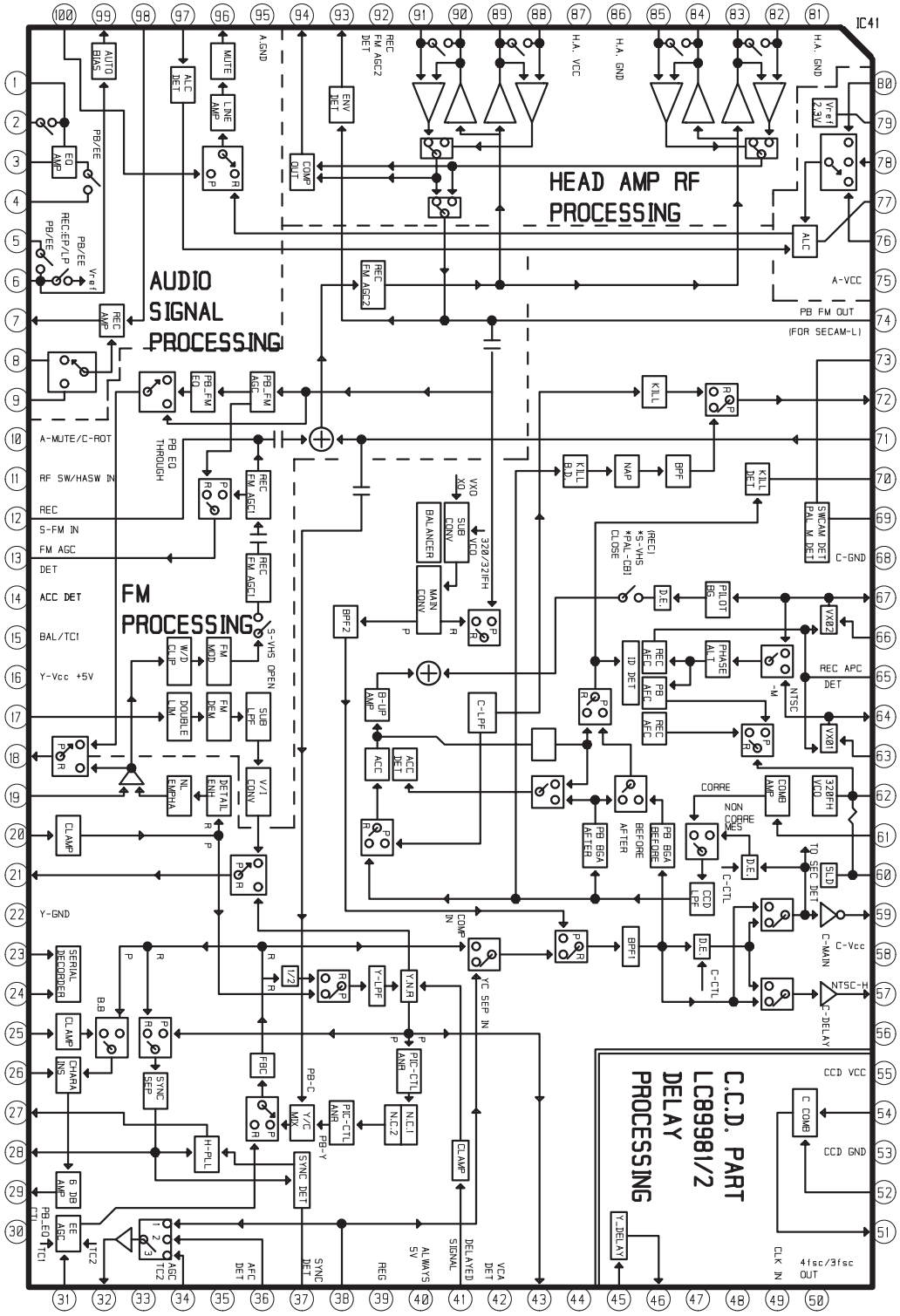

■ PIN DESCRIPTIONS

Pin No.	Pin Name	AC/DC LEVEL		Note
		D C	A C	
1	ALC detection terminal for RF converter			
	AUDIO INPUT TERMINAL	0V		
2	BS(L)			
6	TUNER(L)			
44	TUNER(R)			
48	BS(R)		-28dBV	
49	EXT2(R)			
51	EXT1(R)			
61	EXT1(L)			
63	EXT2(L)			
	BS MONITOR INPUT TERMINAL			
3	BSMONI(L)	2.5V	-28dBV	
47	BSMONI(R)			
4	INPUT CHANGE OVER SWITCH OUTPUT(L)	2.2V	-21dBV	
46	INPUT CHANGE OVER SWITCH OUTPUT(R)			
5	ALC INPUT TERMINAL(L)	2.5V	-28dBV	
45	ALC INPUT TERMINAL(R)			
7	GND			
23	HEAD AMP GND			
34	LOGIC GND			
43	R-GND			
8	MUTE CONTROL TERMINAL			
9	NR WAITING DET TERMINAL(L)			
42	NR WAITING DET TERMINAL(R)			
10	NR WAITING FILTER TERMIANL1(L)	2.5V (PIN10,41)		
41	NR WAITING FILTER TERMIANL1(R)			
11	NR WAITING FILTER TERMIANL2(L)			
40	NR WAITING FILTER TERMIANL2(R)			
12	CCA REFERENCE TERMINAL(L)	2.5V (PIN12,39)		
15	NR EMPHASIS TERMIANL(L)			
38	NR EMPHASIS TERMIANL(R)			
39	CCA REFERENCE TERMINAL(R)			
13	1/2 VCC TERMINAL	2.5V		
14	VCC 5V (L-CH)	5~9.5V		
20	VCC 5V			
30	POWER SUPPLY FOR LOGIC			
36	VCC 5V (R-CH)			
60	VCC 9V			
62	ALWAYS VCC			
16	FIXED EMPHASIS TERMINAL(L)	2.5V		
37	FIXED EMPHASIS TERMINAL(R)	-13dBV		
17	1) TRACKING DC OUT TERMINAL 2) MONITOR CONTROL TERMINAL AT P29(REC)			
18	PB FM INPUT TERMINAL	0V	600mVpp(L/R MIX)	
19	PB AMP OUT PUT	2.5V		
21	FM AGC DETECTION PIN	UNSETTLED		
22	HEAD AMP INPUT TERMINAL(CH1)	PB:2.1V/REC:4.1V		
25	HEAD AMP INPUT TERMINAL(CH2)			

Pin No.	Pin Name	AC/DC LEVEL		Note
		D C	A C	
24	PB GND TERMINAL	PB:0V/REC:2.5V		
26	REC CURRENT AMP TERMINAL			
27	CURRENT AMP ADJUST	2.4V		
29	MONITOR TERMINAL	2.5V		
28	HI-FI/NORMAL DETECTION TERMINAL			
31	SERIAL DATA INPUT TERMINAL			
32	CLK INPUT TERMINAL			
33	REC MUTE TERMINAL			
35	AFSW PULSE INPUT TERMINAL			
50	1) LOG AMP OUTPUT TERMINAL(R)	UNSETTLED		
	2) THROUGH MONITOR INPUT	2.5V	-28dBV	
64	1) LOG AMP OUTPUT TERMINAL(L)			
	2) THROUGH MONITOR INPUT			
51	NC TERMINAL			
53	NORMAL OUTPUT TERMINAL	2.5V	-21dBV	
54	NORMAL INPUT TERMINAL	2.5V	-21dBV	
55	LINE MUTE TERMINAL(R)			
59	LINE MUTE TERMINAL(L)			
56	LINE OUT(R) TERMINAL			
58	LINE OUT(L) TERMINAL			
57	OUT TERMINAL FOR RF MODULATOR	2.5V	-8dBV	

■ BLOCK DIAGRAM (LA72634M)

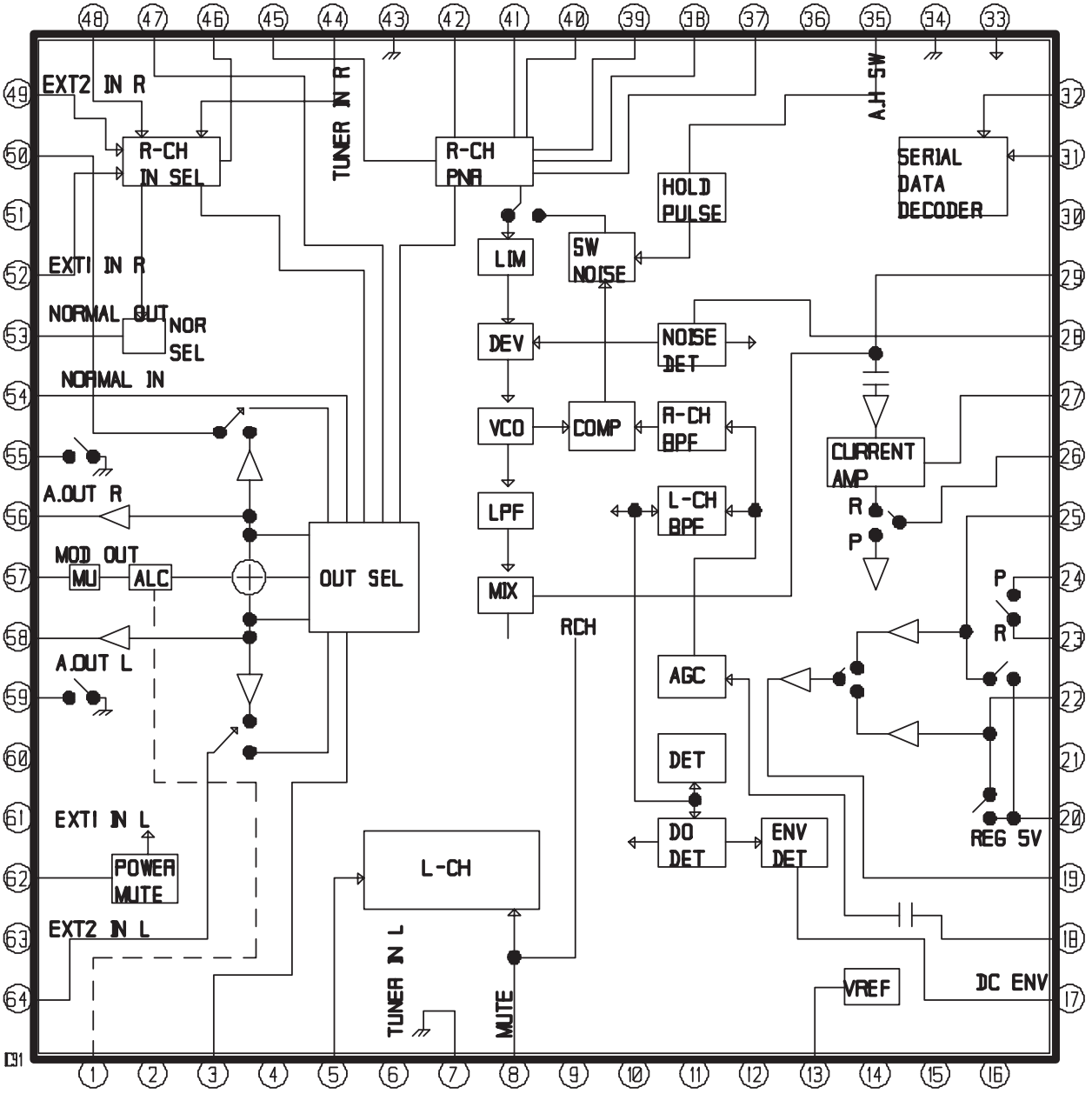

VPS/PDC IC (SDA5650x : IC11)

■ PIN DESCRIPTIONS

PIN NO	PIN NAME	DESCRIPTION
1	VSSA	ANALOG GND (0V)
2	VSSD	DIGITAL GND (0V)
3	NC	NOT CONNECTED
4	SCL	SERIAL CLOCK INPUT OF IIC BUS
5	SDA	SERIAL DATA INPUT OF IIC BUS
6	CS0	CHIP SELECT INPUT DETERMINING THE IIC BUS ADDRESSES: 20H/21H,WHEN PULLED LOW 22H/23H,WHEN PULLED HIGH
7	VCS	VIDEO COPOSITE SYNC OUTPUT FROM SYNC SLICET USED FOR PLL BASED CLOCK GENERATION
8	NC	NOT CONNECTED
9	DAVN	DATA AVAILABLE OUTPUT ACTIVE LOW, WHEN VPS DATA IS RECEIVED
10	EHB	OUTUT SIGNALING THE PRESENCE OF THE FIRST FIELD ACTIVE HIGH
11	TI	TEST INPUT;ACTIVATE TEST MODE WHEN PULLED HIGH. CONNECT TO GROUND FOR OPERATING MODE.
12	PD1	PHASE DETECTOR/CHARGE PUMP OUTPUT OF DATA PLL (DAPLL).
13	NC	NOT CONNECTED
14	PD2/VCO2	CONNECT OF THE LOOP FILTER FOR THE SYSPLL.
15	VCO1	INPUT TO THE VOLTAGE CONTROLLED OSCILLATOR #1 OF THE DAPLL
16	IREF	REFERENCE CURRENT INPUT FOR THE ON-CHIP ANALOG CIRCUIT.
17	CVBS	COMPOSITE VIDEO SIGNAL INPUT.
18	NC	NOT CONNECTED
19	VDDD	POSITIVE SUPPLY VOLTAGE FOR THE DIGITAL CIRCUITS(+5V NOM)
20	VDDA	POSITIVE SUPPLY VOLTAGE FOR THE ANALOG CIRCUITS(+5V NOM)

■ PIN ASSIGNMENTS

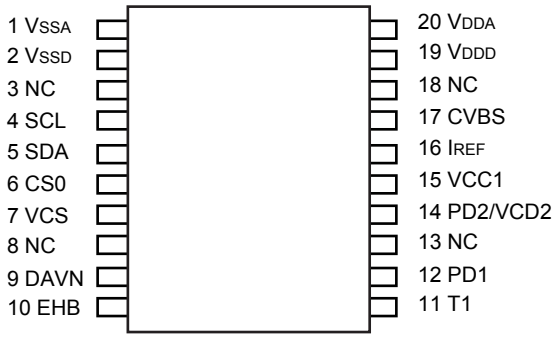

TOP VIEW

■ BLOCK DIAGRAM (SDA5650X)

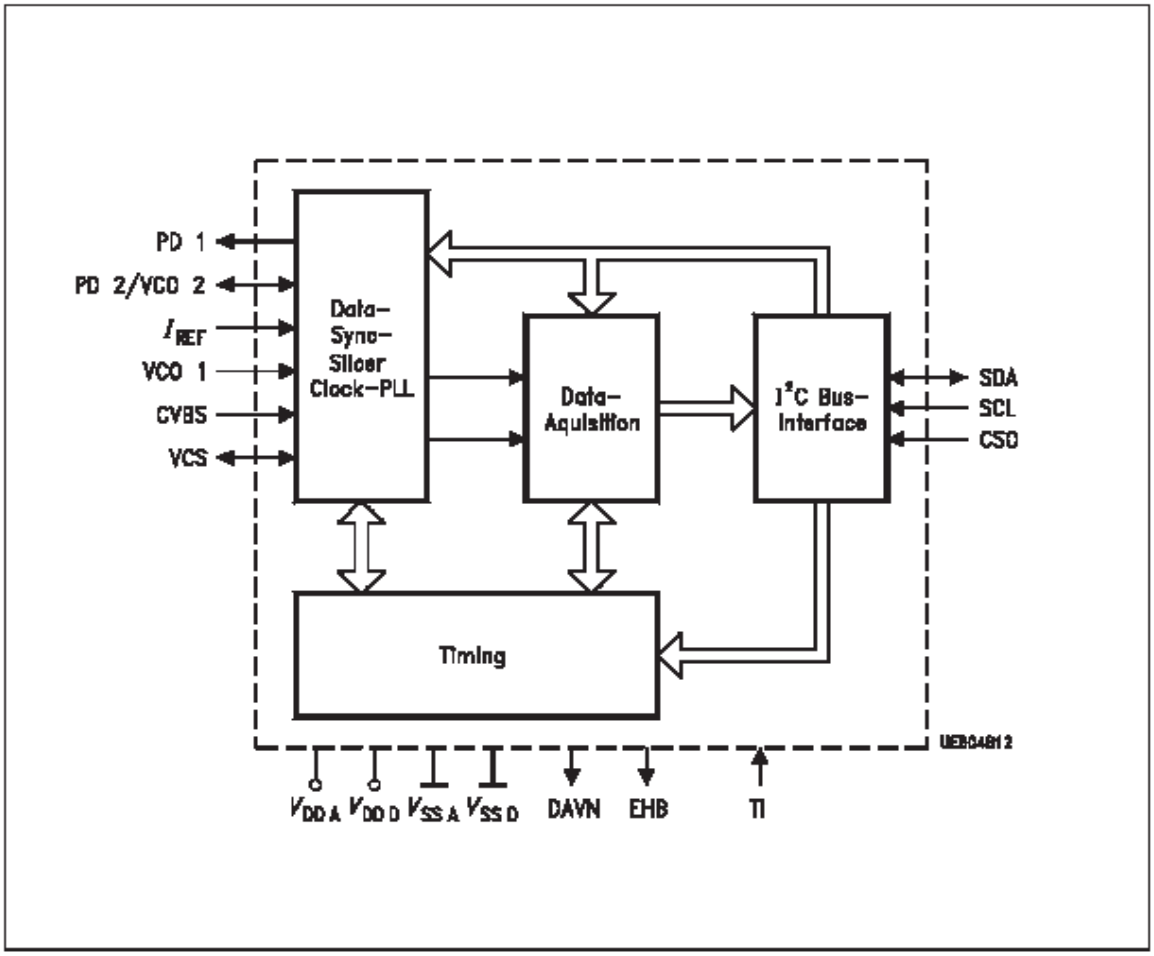

Sound IC (MSP3407G : IC01, *MSP3417 : NICAM)

■ PIN DESCRIPTIONS

NC = not connected; leave vacant
LV = if not used, leave vacant
DVSS: if not used, connect to DVSS
X = obligatory; connect as described in circuit diagram
AHVSS: connect to AHVSS

Pin No.	Pin Name	Type	Connection (if notused)	Short Description
1	AVSUP		X	Analog Power Supply +5V
2	ANA_IN1+	IN	LV	IF Input1
3	ANA_IN-	IN	LV	IF Common
4	TESTEN	IN	X	Test pin
5	XTAL_IN	IN	X	Crystal Osillator
6	XTAL_OUT	IN	X	Crystal Osillator
7	NC		LV	Not connected
8	TP		LV	Test Pin
9	TP		LV	Test Pin
10	ADR_SEL	IN	X	I^2C Bus Address Select
11	STANDBYQ	IN	X	Standby (low-active)
12	I2C_CL	IN/OUT	X	I^2C clock
13	I2C_DA	IN/OUT	X	I^2C data
14	TP		LV	Test Pin
15	TP		LV	Test Pin
16	TP		LV	Test Pin
17	NC		LV	Not connected
18	TP		LV	Test Pin
19	DVSUP		X	Digital Power Supply +5V
20	DVSS		X	Digital Ground
21	NC		LV	Not connected
22	RESETQ	IN	X	Power-on-reset
23	NC		LV	Not connected
24	NC		LV	Not connected
25	VREF2		X	Reference ground 2 high-voltage part

Pin No.	Pin Name	Type	Connection (if not used)	Short Description
26	DACM_R	OUT	LV	Loudspeaker out, Right
27	DACM_L	OUT	LV	Loudspeaker out, Left
28	NC		LV	Not connected
29	VREF1		X	Reference ground 1 high-voltage part
30	SC1_OUT_R	OUT	LV	SCART 1 output, Right
31	SC1_OUT_L	OUT	LV	SCART 1 output, Left
32	NC		LV	Not connected
33	AHVSUB		X	Analog power supply 8.0V
34	CAPL_M		LV	Volume capacitor MAIN
35	AHVSS		X	Analog ground
36	AGNDC		X	Analog reference voltage high-voltage part
37	SC2_IN_L	IN	LV	SCART 2 input, Left
38	SC2_IN_R	IN	LV	SCART 2 input, Right
39	NC		LV	Not connected
40	SC1_IN_L	IN	LV	SCART 1 input, Left
41	SC1_IN_R	IN	LV	SCART 1 input, Right
42	VREFTOP		X	Reference voltage IF A/D converter
43	MONO_IN	IN	LV	Mono input
44	AVSS		X	Analog ground

■ PIN ASSIGNMENTS (MSP3407G)

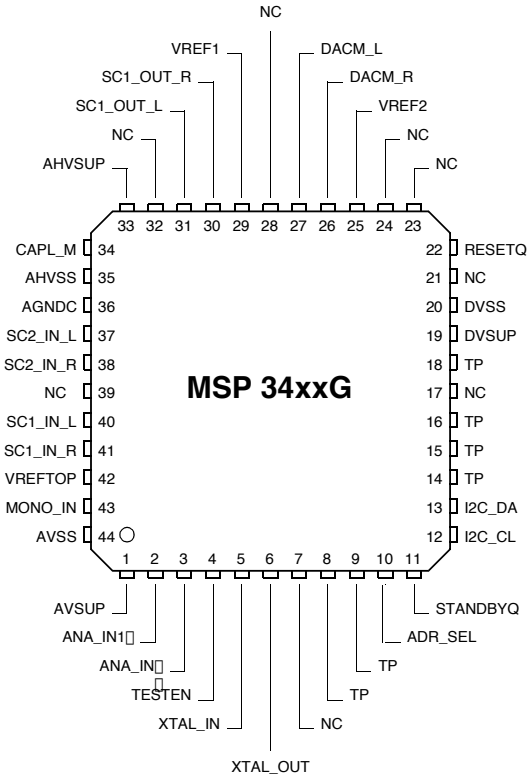

(Top View)

■ BLOCK DIAGRAM (MSP3407G)

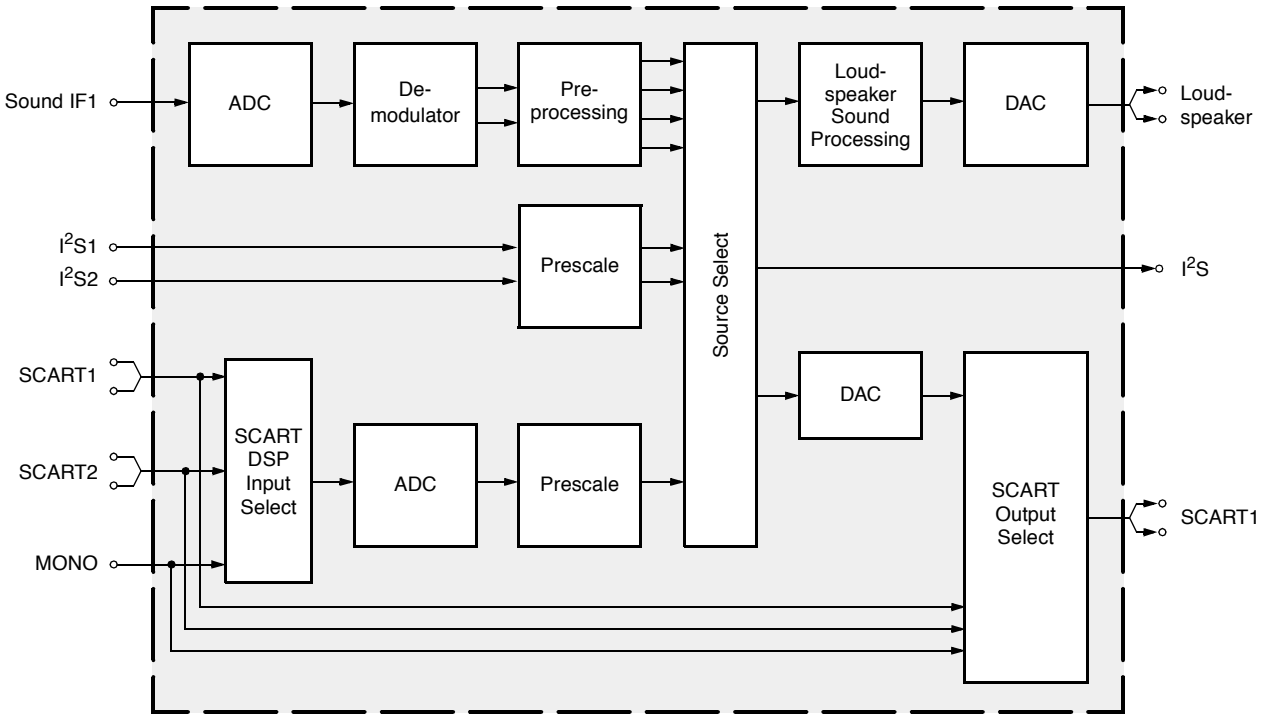

TUNER (PAL : PTMI-5MH02 : TU51)

■ PIN DESCRIPTIONS

Pin No.	Pin Name	Function
1	NC(BB +5V)	
2	AUDIO IN	Audio Input
3	CH SW	
4	MB+	REG(+5V)
5	CONTROL	VCR/TV
6	VIDEO IN	Video Input
7	NC	
8	RF AGC	
9	NC	
10	AS	
11	SCL	Clock Input
12	SDA	Data Input/Output
13	NC	
14	B+	+5V
15	NC	
16	BT	33V
17	NC	
18	IF OUT	IF Output
19	NC	
20	NC	
21	AUDIO OUT	Audio Signal Output
22	SIF OUT	Sound IF signal Output
23	AFT	AFT Output
24	VIDEO OUT	Video Signal Output
25	NC	

■ PIN ASSIGNMENTS

TU51 PAL : PTMI-5MH02

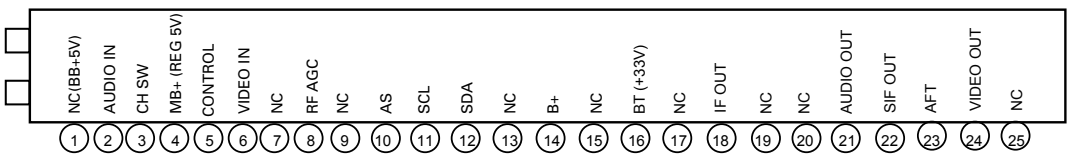

Reset IC (KA75330ZT : IC33, KA75390ZT : IC34)

■ PIN DESCRIPTIONS

Pin Number	Pin Name	I/O	Pin Function Description
1	VCC	I	Input
2	GND	-	Ground
3	RST	O	Output

■ PIN ASSIGNMENTS

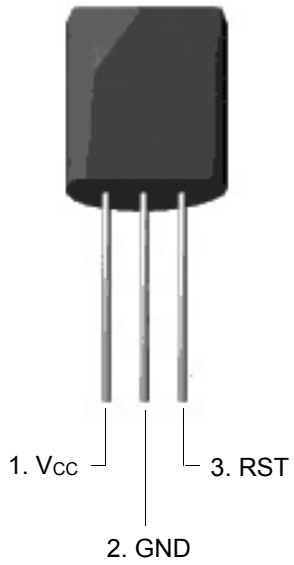

■ BLOCK DIAGRAM

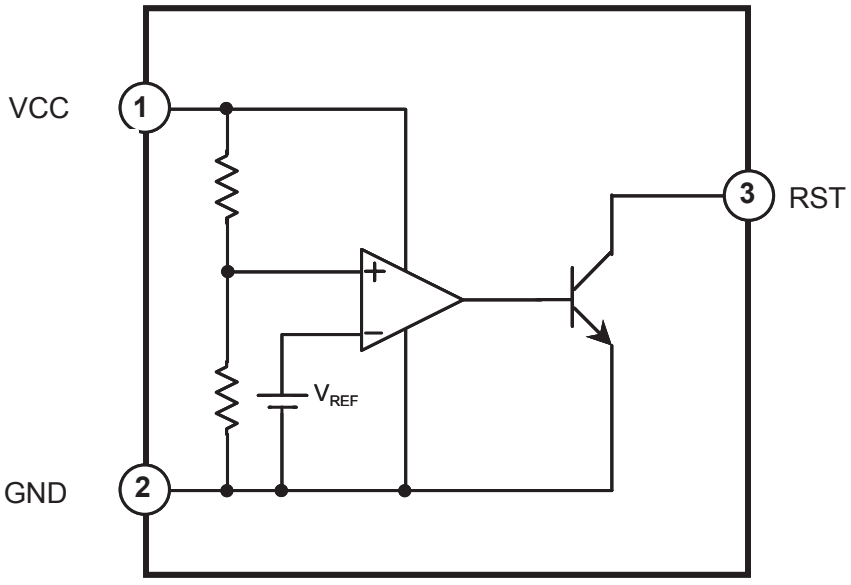

EEPROM (24WC04P : IC35)

■ PIN DESCRIPTIONS

Pin No.	Pin Name	Function
1	A0	Device Address Input
2	A1	Device Address Input
3	A2	Device Address Input
4	V_{SS}	Ground
5	SDA2	Serial Data/Address
6	SCL2	Serial Clock
7	GND	Write Protect
8	V_{DD}	+1.8V to +6V Power Supply

■ PIN ASSIGNMENTS

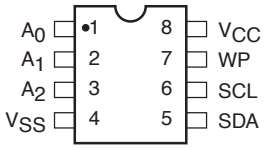

■ BLOCK DIAGRAM

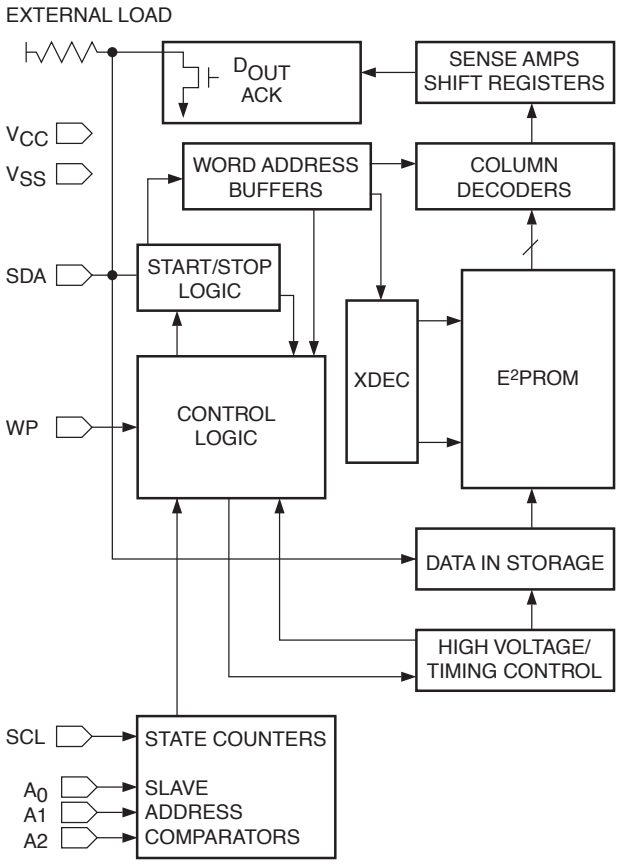

TR (TO-92)

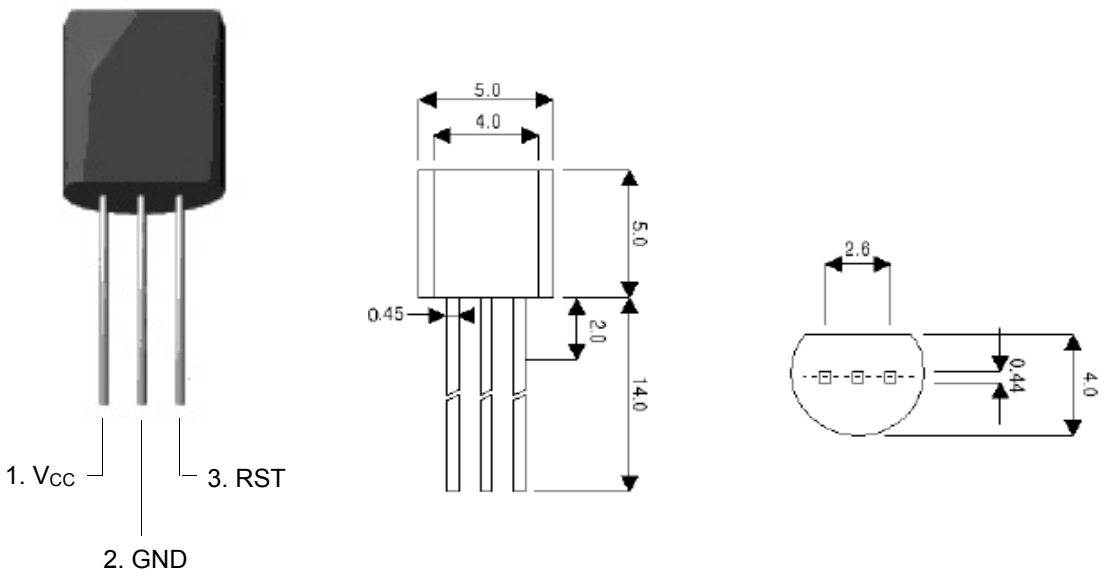

DESCRIPTION	TYPE	DESCRIPTION	TYPE
TR (KSA928AYT)	PNP	TR (KSC2328AYT)	NPN
TR (KTC3203YT)	NPN	TR (KSR1204T)	NPN
TR (KSC945CYT)	NPN	TR (KSA1175YT)	PNP
TR (KSA733CYT)	PNP	TR (KSC2785YT)	NPN
TR (KSR1201T)	NPN		

IC AND TRANSISTOR VOLTAGE CHART

MEASUREMENT CONDITION
- Function : DVD(NO DISC)
- Unit : V

FRONT BOARD PART

IC74(LC75725E)		
PIN NO.	DESCRIPTION	VOLTAGE
1	VFL	-30.5
2	G1	-27.0
3	G2	-27.0
4	G3	-27.0
5	G4	-27.0
6	G5	-27.0
7	G6	-27.0
8	G7	-27.0
9	G8	-27.0
10	G9	-27.0
11	G10	-27.0
12	G11	-27.0
13	VFL	-30.6
14	S43	0
15	S42	0
16	S41	0
17	S40	0
18	S39	0
19	S38	0
20	S37	0
21	S36	0
22	S35	0
23	S34	0
24	S33	0
25	S32	0
26	S31	0
27	S30	0
28	S29	0
29	S28	0
30	S27	0
31	S26	0
32	S25	0
33	S24	0
34	S23	0
35	S22	0
36	S21	-27.0
37	S20	-30.0
38	S19	-20.0
39	S18	-14.0
40	S17	-14.0
41	S16	-24.0
42	S15	-24.0
43	S14	-30.0
44	S13	-20.0
45	S12	-27.0
46	S11	-30.0
47	S10	-20.0
48	S9	-30.0
49	S8	-24.0
50	S7	-27.0
51	S6	-17.0
52	S5	-15.0
53	S4	-15.0
54	S3	-30.0
55	S2	-30.0
56	S1	-30.0
57	VSS	0.0
58	OSCO	2.4
59	OSCI	2.4
60	VDD	4.6
61	BLK	3.7
62	CE	1.0
63	CL	0.0
64	DI	1.4

IC76(M2068MD)		
PIN NO.	DESCRIPTION	VOLTAGE
1	A OUTPUT	0
2	A-INPUT	0
3	A+INPUT	0
4	V-	-11.4
5	B+INPUT	0
6	B-INPUT	0
7	B INPUT	0
8	V+	11.4

MAIN BOARD PART

IC10(M2068MD)		
PIN NO.	DESCRIPTION	VOLTAGE
1	A OUTPUT	0
2	A-INPUT	0
3	A+INPUT	0
4	V-	-11.4
5	B+INPUT	0
6	B-INPUT	0
7	B INPUT	0
8	V+	11.4

IC15(TC9164AF)		
PIN NO.	DESCRIPTION	VOLTAGE
1	VSS	-11.8
2	L-S1	0
3	L-S2	0
4	L-S3	0
5	L-S4	0
6	L-COM1	0
7	L-S5	0
8	L-S6	0
9	L-COM2	0
10	L-S7	0
11	L-S8	0
12	L-COM3	0
13	ST	0
14	GND	0
15	CK	0
16	DATA	0
17	R-COM3	0
18	R-S8	0
19	R-S7	0
20	R-COM2	0
21	R-S6	0
22	R-S5	0
23	R-COM1	0
24	R-S4	0
25	R-S3	0
26	R-S2	0
27	R-S1	0
28	VDD	11.8

IC16(NJM2296)		
PIN NO.	DESCRIPTION	VOLTAGE
1	Vout1	0
2	SW5	3.6
3	Vin5	0
4	SW3	0
5	Vin4	0
6	SW4	0
7	Vin3	0
8	V-	-6.2
9	Vin2	0
10	SW2	0
11	Vout	0
12	GND	0
13	Vin1	0
14	SW1	3.7
15	Vout	0
16	V+	6.1

IC17(NJM2233BV)		
PIN NO.	DESCRIPTION	VOLTAGE
1	Vin1	2.6
2	SW1	0
3	Vin2	2.6
4	NC	0
5	NC	0
6	V+	11.7
7	Vout	1.9
8	GND	0

IC41(TC74HCU04AFN)		
PIN NO.	DESCRIPTION	VOLTAGE
1	A1	0
2	Y1	4.6
3	A2	0
4	Y2	4.6
5	A3	2.2
6	Y3	0
7	GND	0
8	Y4	4.6
9	A4	0
10	Y5	4.6
11	A5	0
12	Y6	4.6
13	A6	0
14	VCC	4.6

IC52(74AHC08D)		
PIN NO.	DESCRIPTION	VOLTAGE
1	A0	0
2	B0	3.9
3	O0	0
4	A1	0
5	B1	0
6	O1	0
7	GND	0
8	O3	0
9	B3	0
10	A3	0
11	O2	0
12	B2	0
13	A2	0
14	VCC	3.9

IC53(74ACT08D)		
PIN NO.	**DESCRIPTION**	**VOLTAGE**
1	A0	0
2	B0	5.6
3	O0	0
4	A1	0
5	B1	5.6
6	O1	0
7	GND	0
8	O3	0
9	B3	0
10	A3	0
11	O2	0
12	B2	5.6
13	A2	0
14	VCC	5.6

IC54(74ACT08D)		
PIN NO.	**DESCRIPTION**	**VOLTAGE**
1	A0	0
2	B0	5.6
3	O0	0
4	A1	0
5	B1	5.6
6	O1	0
7	GND	0
8	O3	0
9	B3	0
10	A3	0
11	O2	0
12	B2	5.6
13	A2	0
14	VCC	5.6

IC75(DDX8000)		
PIN NO.	**DESCRIPTION**	**VOLTAGE**
1	MVO	0
2	GND	0
3	VDD3.3	3.2
4	GND	0
5	VDD2.5	2.3
6	SDI78	0
7	SDI56	0
8	SDI34	0
9	SDII2	0
10	LRCKI	1.7
11	BICKI	1.6
12	VDD3.3	3.3
13	GND	0
14	VDD2.5	2.3
15	RESET	3.6
16	PLLB	0
17	SA	0
18	SDA	3.6
19	SCL	3.6
20	XTI	3.6
21	PLLF	0
22	VDD_PL	2.3
23	GND_PL	0
24	VDD3.3	3.3
25	CKOUT	0
26	VDD2.5	2.3
27	GND	0
28	VDD3.3	3.3
29	OUT8B	0
30	OUT8A	0
31	OUT7B	0
32	OUT7A	0
33	OUT6B	0
34	OUT6A	0
35	VDD3.3	0
36	GND	0
37	VDD2.5	0
38	OUT5B	0
39	OUT5A	0
40	OUT4B	0
41	OUT4A	0
42	OUT3B	0
43	OUT3A	0
44	VDD3.3	3.3
45	GND	0
46	VDD2.5	2.3
47	OUT2B	0
48	OUT2A	0
49	OUT1B	0
50	OUT1A	0
51	EAPD	3.2
52	VDD3.3	3.2
53	GND	0
54	VDD2.5	2.3
55	BICKO	0
56	LRCKO	0
57	SDO12	0
58	SDOO34	0

59	VDD3.3	3.2
60	GND	0
61	VDD2.5	2.3
62	SDO56	0
63	SDO78	0
64	PWDN	3.6

IC80,83,86(DDX2100)		
PIN NO.	**DESCRIPTION**	**VOLTAGE**
1	GNDS	0
2	OUTNR	0
3	OUTNR	0
4	VCC2N	29.5
5	PGND2N	0
6	PGND2P	0
7	VCC2P	29.5
8	OUTPR	0
9	OUTPR	0
10	OUTNL	0
11	OUTNL	0
12	VCC1N	29.5
13	PGND1N	0
14	PGND1P	0
15	VCC1P	29.5
16	OUTPL	0
17	OUTPL	0
18	NC	0
19	GNDREF	0
20	GNDR1	0
21	VREG1	4.9
22	VREG1	4.9
23	VL	3.3
24	CONFIG	0
25	PWRDN	3.2
26	TRI-STATE	3.2
27	FAULT	3.2
28	TWARN	3.3
29	INLA	0
30	INLB	0
31	INRA	0
32	INRB	0
33	VREG2	24.3
34	VREG2	24.3
35	VSIG	29.3
36	VSIG	30.3

IC90(5V REGULATOR)		
PIN NO.	**DESCRIPTION**	**VOLTAGE**
1	VI	23
2	GND	0
3	VO	5

IC91(REGULATOR)		
PIN NO.	**DESCRIPTION**	**VOLTAGE**
1	ADJ	2.0
2	VO	3.3
3	VI	5.0
4	TAB	3.3

POWER BOARD PART

IC91(12V REGULATOR)		
PIN NO.	**DESCRIPTION**	**VOLTAGE**
1	IN	16.0
2	OUT	11.9
3	GND	0.0
4	ENABLE	3.0

IC92(12V REGULATOR)		
PIN NO.	**DESCRIPTION**	**VOLTAGE**
1	IN	16.0
2	GND	0
3	OUT	11.8

IC93(-12V REGULATOR)		
PIN NO.	**DESCRIPTION**	**VOLTAGE**
1	GND	0
2	IN	-16.7
3	OUT	-11.9

IC94(6V REGULATOR)		
PIN NO.	**DESCRIPTION**	**VOLTAGE**
1	IN	8.9
2	OUT	6.0
3	GND	0
4	ENABLE	3.5

IC95(6V REGULATOR)		
PIN NO.	**DESCRIPTION**	**VOLTAGE**
1	IN	9.2
2	OUT	5.6
3	GND	0
4	ENABLE	9.0

IC96(6V REGULATOR)		
PIN NO.	**DESCRIPTION**	**VOLTAGE**
1	IN	8.9
2	OUT	5.9
3	GND	0
4	ENABLE	8.9

IC97(9V REGULATOR)		
PIN NO.	**DESCRIPTION**	**VOLTAGE**
1	IN	12.2
2	GND	0
3	OUT	8.9

IC98(12V REGULATOR)		
PIN NO.	**DESCRIPTION**	**VOLTAGE**
1	IN	13.2
2	GND	0
3	OUT	12.2

MPEG BOARD PART

IC11(HY29LV160BT90)		
PIN NO.	**DESCRIPTION**	**VOLTAGE**
1	A[15]	1.5
2	A[14]	1.9
3	A[13]	2.5
4	A[12]	0.6
5	A[11]	1.8
6	A[10]	1
7	A[9]	1.1
8	A[8]	1.8
9	A[19]	1.5
10	NC	0
11	WE#	3.3
12	RESET#	3.6
13	NC	0
14	NC	0
15	RY/BY#	0
16	A[18]	2.1
17	A[17]	1.2
18	A[7]	1.5
19	A[6]	1.5
20	A[5]	1.4
21	A[4]	1.8
22	A[3]	1.8
23	A[2]	1.2
24	A[1]	1.8
25	A[0]	0
26	CE#	3.1
27	VSS	0
28	OE#	3.1
29	DQ[0]	2.2
30	DQ[8]	0
31	DQ[1]	0
32	DQ[9]	2.2
33	DQ[2]	0
34	DQ[10]	2.0
35	DQ[3]	0
36	DQ[11]	0
37	VCC	3.3
38	DQ[4]	2.3
39	DQ[12]	0
40	DQ[5]	0
41	DQ[13]	0
42	DQ[6]	2.0
43	DQ[14]	0
44	DQ[7]	2.2
45	DQ[15]/A[-1]	0
46	VSS	0
47	BYTE#	0
48	A[16]	1.5

IC12(SN74LVC374)		
PIN NO.	**DESCRIPTION**	**VOLTAGE**
1	OE	0
2	Q0	3.3
3	D0	0
4	D1	0
5	Q1	0
6	Q2	3.3
7	D2	0
8	D3	0
9	Q3	3.3
10	GND	0
11	CP	0
12	Q4	0

13	D4	0
14	D5	0
15	Q5	0
16	Q6	0
17	D6	0
18	D7	1.4
19	Q7	3.3
20	VCC	3.3

IC13(SN74LVC244)		
PIN NO.	**DESCRIPTION**	**VOLTAGE**
1	1OE	3.3
2	1A0	0
3	2Y0	2.9
4	1A1	0
5	WY1	0
6	1A2	0
7	2Y2	0
8	1A3	0
9	2Y3	0
10	GND	0
11	2A3	0
12	1Y3	0
13	2A2	0
14	1Y2	0
15	2A1	0
16	1Y1	0
17	2A0	0
18	1Y0	1.4
19	2OE	3.3
20	VCC	3.3

IC14(AK4112BVF)		
PIN NO.	**DESCRIPTION**	**VOLTAGE**
1	DVDD	3.3
2	DVSS	0
3	TVDD	5.0
4	V/TX	0
5	XTI	0
6	XTO	3.3
7	PDN	3.3
8	R	1.2
9	AVDD	3.3
10	AVSS	0
11	RX1	4.0
12	RX2/DIF0	4.6
13	RX3/DIF1	1.7
14	RX4/DIF2	0
15	AUTO	0
16	P/SN	0
17	FS96	0
18	ERF	0
19	LRCK	0
20	SDTO	0
21	BICK	0
22	DAUX	0
23	MCKO2	0
24	MCKO1	0
25	OCKS0/CSN	3.3
26	OCKS1/CCLK	3.3
27	CM1/CDT1	0
28	CM0/CDT0	0

IC15(SN74LVC157)		
PIN NO.	**DESCRIPTION**	**VOLTAGE**
1	S	3.3
2	1I0	0
3	1I1	1.7
4	1Y	1.7
5	2I0	0
6	2I1	1.6
7	2Y	1.7
8	GND	0
9	3Y	0.8
10	3I1	1.2
11	3I0	0
12	4Y	0
13	4I1	0
14	4I0	0
15	E	0
16	VCC	3.3

IC21(BR24C16F)		
PIN NO.	**DESCRIPTION**	**VOLTAGE**
1	A0	0
2	A1	0
3	A2	0
4	GND	0
5	SDA	3.3
6	SCL	3.3
7	WP	0
8	VCC	5.0

IC31(BU2098F)		
PIN NO.	DESCRIPTION	VOLTAGE
1	A0	0
2	A1	0
3	A2	0
4	Q0	0
5	Q1	0
6	Q2	0
7	Q3	0
8	VSS	0
9	Q4	0
10	Q5	0
11	Q6	0.8
12	Q7	0
13	NC	0
14	SCL	3.3
15	SDA	3.3
16	VDD	5.0

IC41(PCM1801U)		
PIN NO.	DESCRIPTION	VOLTAGE
1	VNL	2.1
2	VNR	2.1
3	DGND	0.0
4	VDD	5.0
5	SCKI	1.3
6	BCK	1.6
7	LRCK	1.7
8	DOUT	1.2
9	BYPAS	0
10	FMT	5.0
11	VCC	5.0
12	AGND	0
13	VREF2	2.9
14	VRE1	2.1

IC51(HY57V641620D)		
PIN NO.	DESCRIPTION	VOLTAGE
1	VDD	3.3
2	DQ0	0.7
3	VDDQ	3.3
4	DQ1	0.7
5	DQ2	2.3
6	VSSQ	0
7	DQ3	0.9
8	DQ4	0.9
9	VDDQ	3.3
10	DQ5	1.2
11	DQ6	1
12	VSSQ	0
13	DQ7	0.6
14	VDD	3.3
15	LDQM	0
16	/WE	3.3
17	/CAS	3.3
18	/RAS	3.3
19	/CS	3
20	BA0	0
21	BA1	0
22	A10/AP	0
23	A0	0
24	A1	0.5
25	A2	0.3
26	A3	1.8
27	VDD	3.3
28	VSS	0
29	A4	1.9
30	A5	1.6
31	A6	1.5
32	A7	1.3
33	A8	0.6
34	A9	0
35	A11	0
36	NC	0
37	CKE	3.3
38	CLK	1.4
39	UDQM	0
40	NC	0
41	VSS	0
42	DQ8	0
43	VDDQ	3.3
44	DQ9	0.8
45	DQ10	1.1
46	VSSQ	0
47	DQ11	0.5
48	DQ12	0.4
49	VDDQ	3.3
50	DQ13	1.5
51	DQ14	1.0
52	VSSQ	0
53	DQ15	1.4
54	VSS	0

IC70(74VHC04)		
PIN NO.	**DESCRIPTION**	**VOLTAGE**
1	**1A**	**1.7**
2	1Y	1.4
3	2A	1.4
4	2Y	1.4
5	3A	0
6	3Y	2.7
7	GND	0
8	4Y	1.7
9	4A	0
10	5Y	1.2
11	5A	1.1
12	6Y	1.1
13	6A	1.2
14	VCC	2.7

IC80(REGULATOR)		
PIN NO.	**DESCRIPTION**	**VOLTAGE**
1	ADJ	1.9
2	VO	3.1
3	VI	5.0
4	TAB	3.1

IC90(REGULATOR)		
PIN NO.	**DESCRIPTION**	**VOLTAGE**
1	ADJ	2.0
2	VO	3.3
3	VI	5.0
4	TAB	3.3

IC93(BA7609F)		
PIN NO.	**DESCRIPTION**	**VOLTAGE**
1	**IN2A**	**2.3**
2	CTLA	0
3	OUTA	1.7
4	GND	0
5	OUTB	0
6	OUTC	0.9
7	CTLC	0
8	IN2C	2.2
9	IN1C	0
10	GND	0
11	IN1B	0
12	CTLB	0
13	VCC	5.0
14	IN2B	0
15	GND	0
16	IN1A	0

IC94(BA7622F)		
PIN NO.	**DESCRIPTION**	**VOLTAGE**
1	GND	0
2	IN1	2.4
3	IN2	2.3
4	IN3	2.7
5	VCC	5.0
6	OUT3	1.9
7	OUT2	1.5
8	OUT1	1.6

IC95(BA7622F)		
PIN NO.	**DESCRIPTION**	**VOLTAGE**
1	GND	0
2	IN1	2.0
3	IN2	1.6
4	IN3	2.7
5	VCC	5.0
6	OUT3	2.0
7	OUT2	0.9
8	OUT1	1.4

TRANSISTOR VOLTAGE CHART

FRONT BOARD PART

REF.NO.	E	C	B
Q711	0	3.1	0

MAIN BOARD PART

REF.NO.	E	C	B
Q101	4.0	4.0	3.3
Q102	4.0	0	3.3
Q111	0	0	0.6
Q112	0	0	0.6
Q131	4	0	3.3
Q132	4	0	3.3
Q143	4	0	3.3
Q144	4	0	3.3
Q184	2.7	0	2.0
Q194	2.7	0	2
Q195	2.8	0	2
Q203	0	11.7	0
Q204	0	0	0.6
Q205	0	0	0.6
Q261	0	0	-11.2
Q262	0	0	-11.2
Q263	0.3	-11.2	0
Q271	0	1.2	0
Q272	1.2	0.7	0
Q273	0	0	3.6
Q310	0	5.6	0
Q340	0	0	0
Q341	0	0	0
Q342	0	0	0
Q343	0	0	0
Q344	0	0	0
Q357	0	0	0
Q358	0	0	0
Q359	0	0	0
Q912	2.4	3.2	3.1
Q921	4.5	5.6	5.2
Q941	5.6	5.6	5.0
Q942	0	0	0.7
Q951	-11.9	-11.9	-11.2
Q952	3.2	3.1	0.0
Q953	11.8	11.8	11.8
Q954	0.0	0.0	0.7

POWER BOARD PART

REF.NO.	E	C	B
Q940	-30.0	- 34.6	-31.4
Q941	-11.9	0.0	-11.9
Q942	0	0	-11.9

MPEG BOARD PART

REF.NO.	E	C	B
Q501	0	0	0.6
Q502	0	0	0.6
Q503	0	0	0.6
Q701	0	3.3	0

SCHEMATIC DIAGRAMS

FRONT BOARD

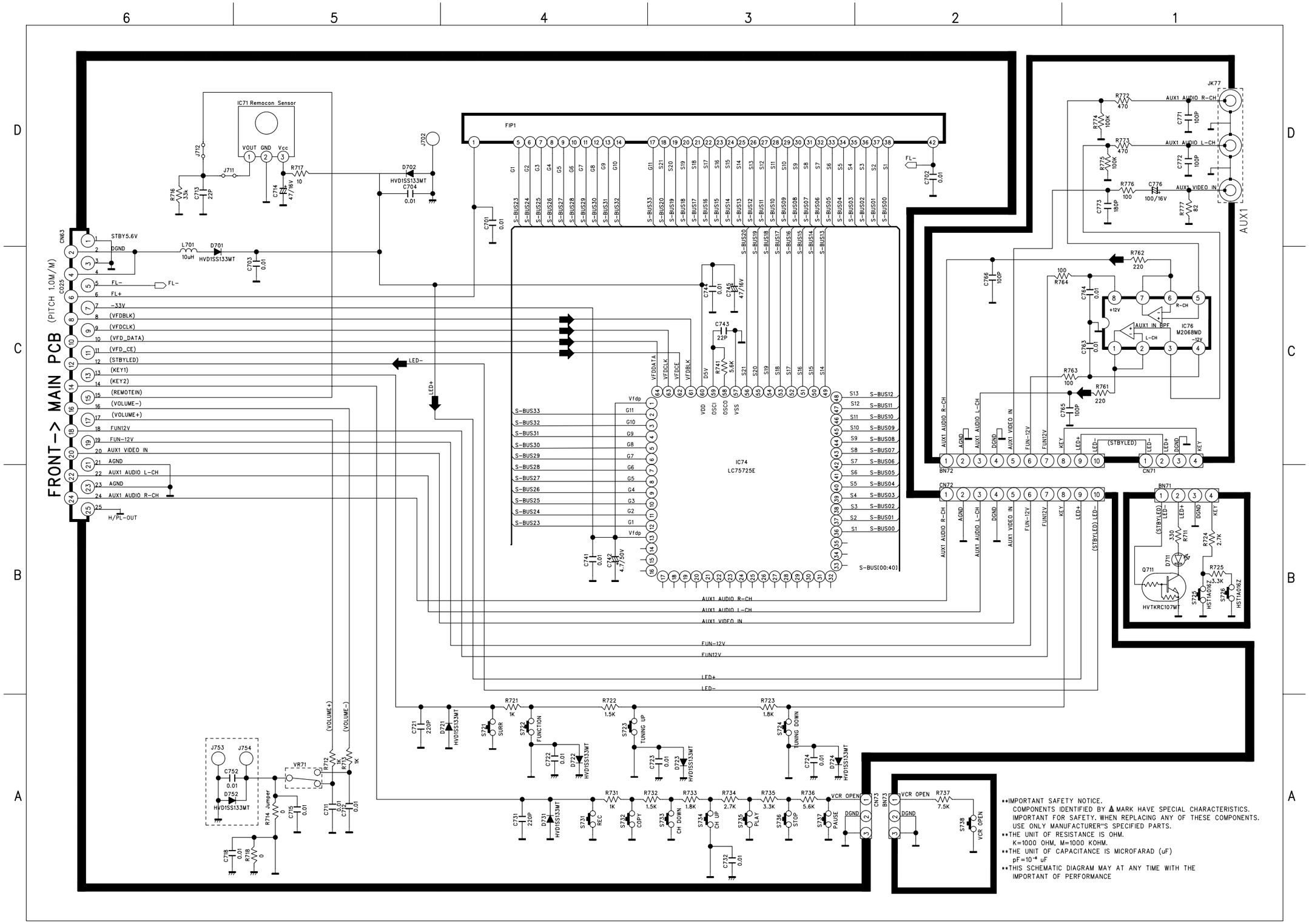

**IMPORTANT SAFETY NOTICE.
COMPONENTS IDENTIFIED BY ⚠ MARK HAVE SPECIAL CHARACTERISTICS.
IMPORTANT FOR SAFETY. WHEN REPLACING ANY OF THESE COMPONENTS.
USE ONLY MANUFACTURER"S SPECIFIED PARTS.

**THE UNIT OF RESISTANCE IS OHM.
K=1000 OHM, M=1000 KOHM.

**THE UNIT OF CAPACITANCE IS MICROFARAD (uF)
pF=10⁻⁶ uF

**THIS SCHEMATIC DIAGRAM MAY AT ANY TIME WITH THE
IMPORTANT OF PERFORMANCE

MAIN BOARD 1 (MICOM/FUNCTION)

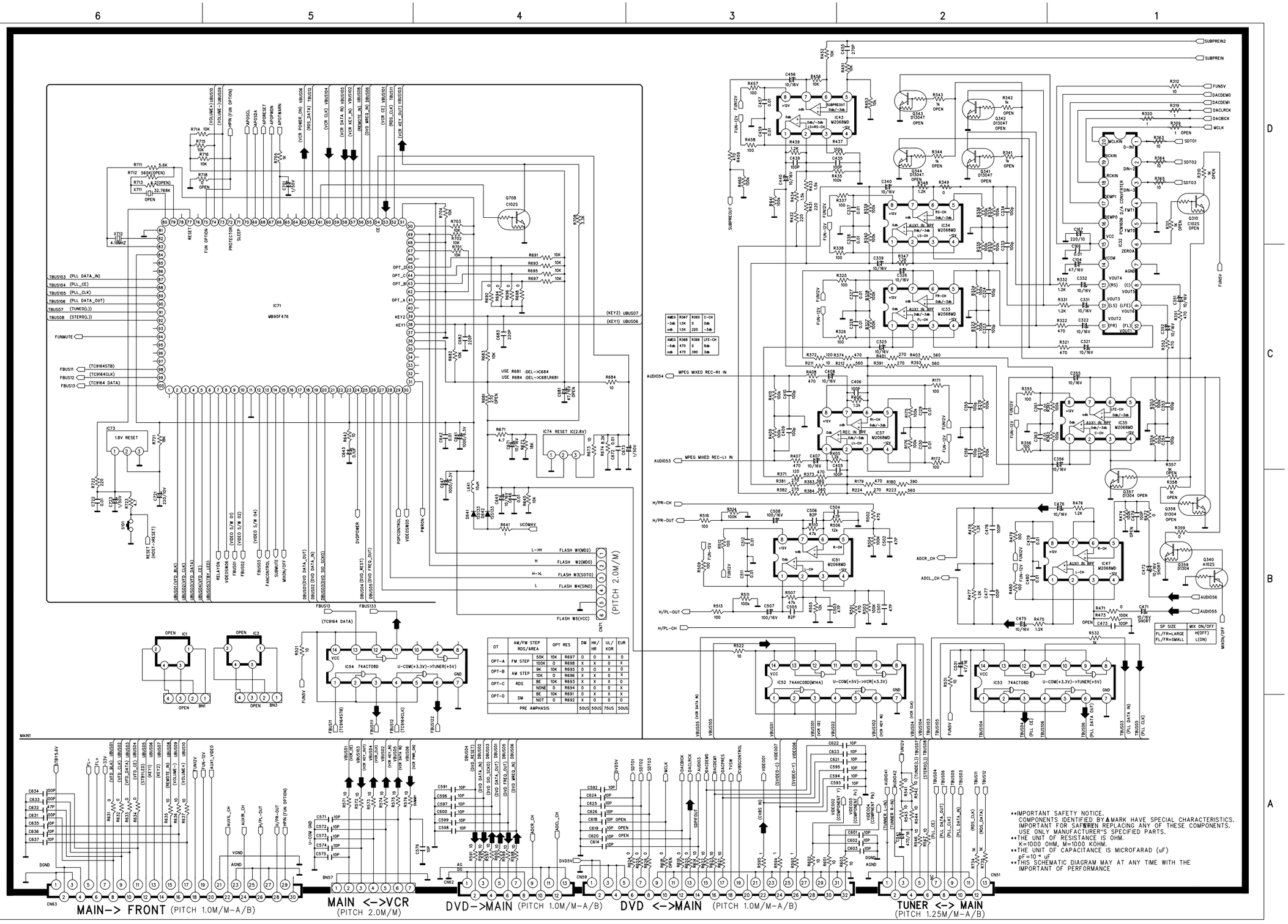

MAIN BOARD 2 (INPUT)

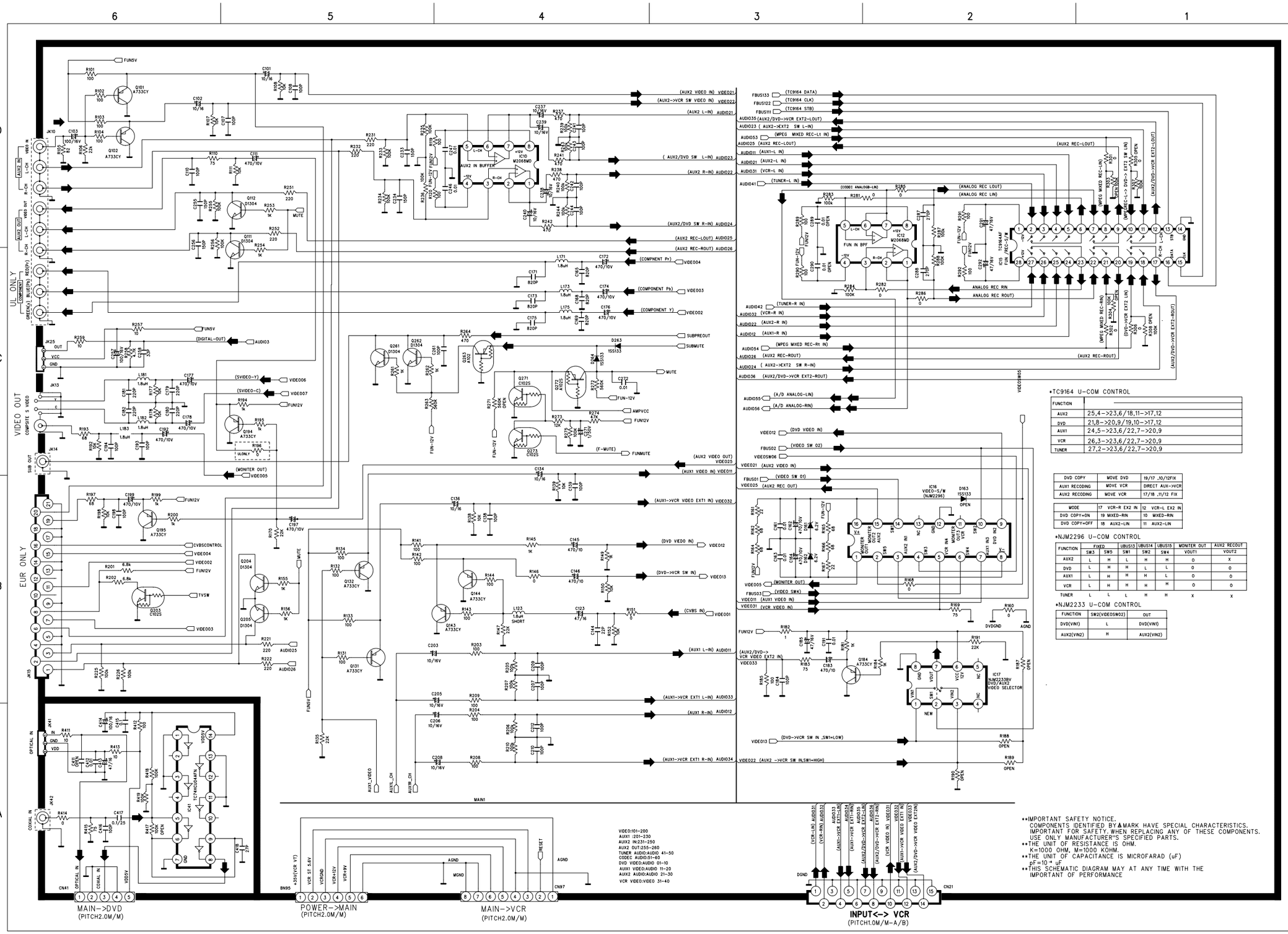

•TC9164 U-COM CONTROL

FUNCTION	
AUX2	25,4->23,6/18,11->17,12
DVD	21,8->20,9/19,10->17,12
AUX1	24,5->23,6/22,7->20,9
VCR	26,3->23,6/22,7->20,9
TUNER	27,2->23,6/22,7->20,9

DVD COPY	MOVE DVD	19/17 ,10/12FIX
AUX1 RECODING	MOVE VCR	DIRECT AUX->VCR
AUX2 RECODING	MOVE VCR	17/18 ,11/12 FIX

MODE	17 VCR-R EX2 IN	12 VCR-L EX2 IN
DVD COPY=ON	19 MIXED-RIN	10 MIXED-RIN
DVD COPY=OFF	18 AUX2-LIN	11 AUX2-LIN

•NJM2296 U-COM CONTROL

FUNCTION	FIXED		UBUS13	UBUS14	UBUS15	MONITER OUT	AUX2 RECOUT
	SW3	SW5	SW1	SW2	SW4	VOUT1	VOUT2
AUX2	L	H	L	H	H	O	X
DVD	L	H	H	L	L	O	O
AUX1	L	H	H	H	L	O	O
VCR	L	H	H	H	H	O	O
TUNER	L	L	L	H	H	X	X

•NJM2233 U-COM CONTROL

FUNCTION	SW2(VIDEOSW02)	OUT
DVD(VIN1)	L	DVD(VIN1)
AUX2(VIN2)	H	AUX2(VIN2)

**IMPORTANT SAFETY NOTICE.
COMPONENTS IDENTIFIED BY▲MARK HAVE SPECIAL CHARACTERISTICS.
IMPORTANT FOR SAFETY. WHEN REPLACING ANY OF THESE COMPONENTS.
USE ONLY MANUFACTURER'S SPECIFIED PARTS.
**THE UNIT OF RESISTANCE IS OHM.
K=1000 OHM, M=1000 KOHM.
**THE UNIT OF CAPACITANCE IS MICROFARAD (uF)
pF=10^-6 uF
**THIS SCHEMATIC DIAGRAM MAY AT ANY TIME WITH THE
IMPORTANT OF PERFORMANCE

MAIN BOARD 3 (AMP)

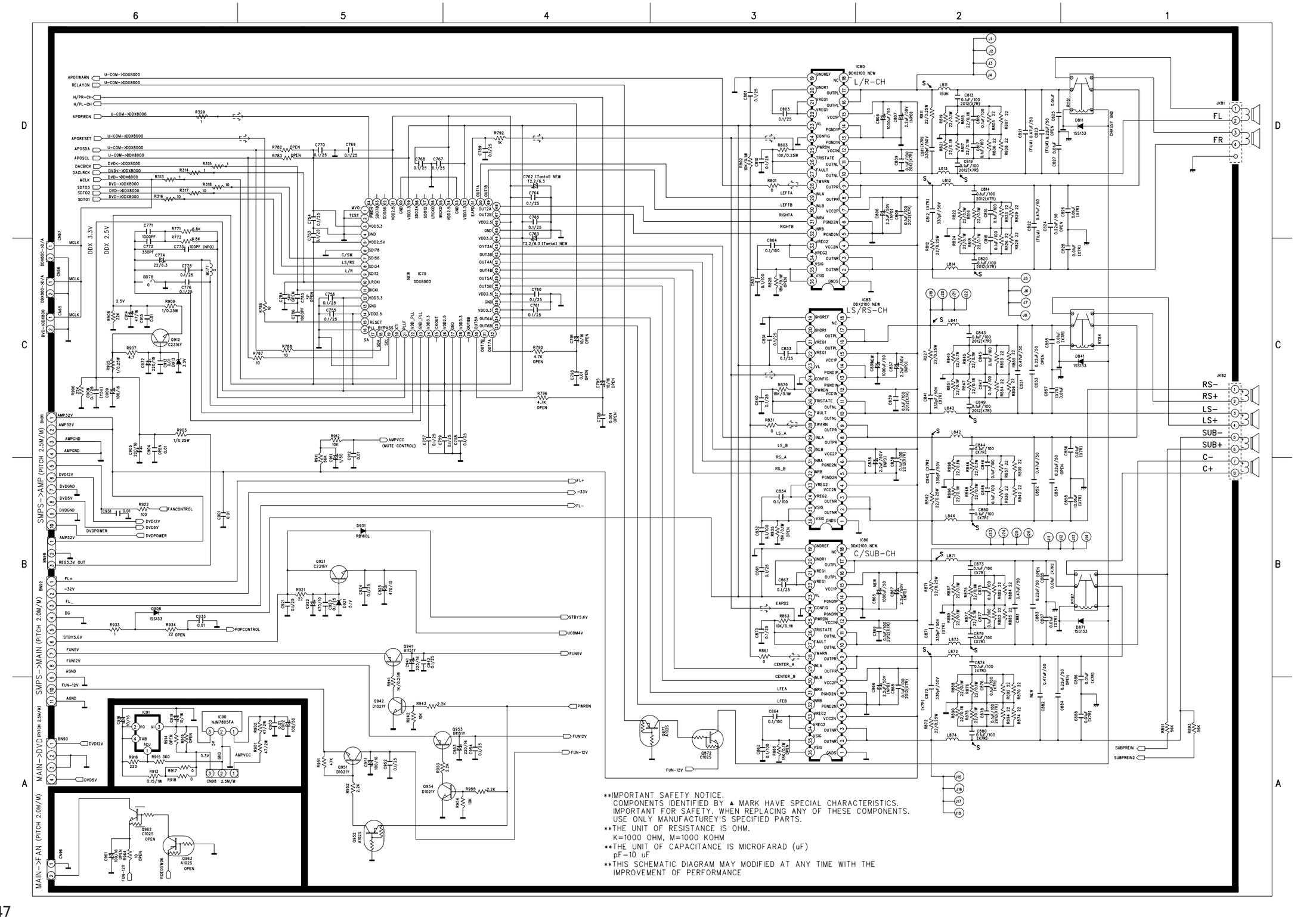

POWER BOARD

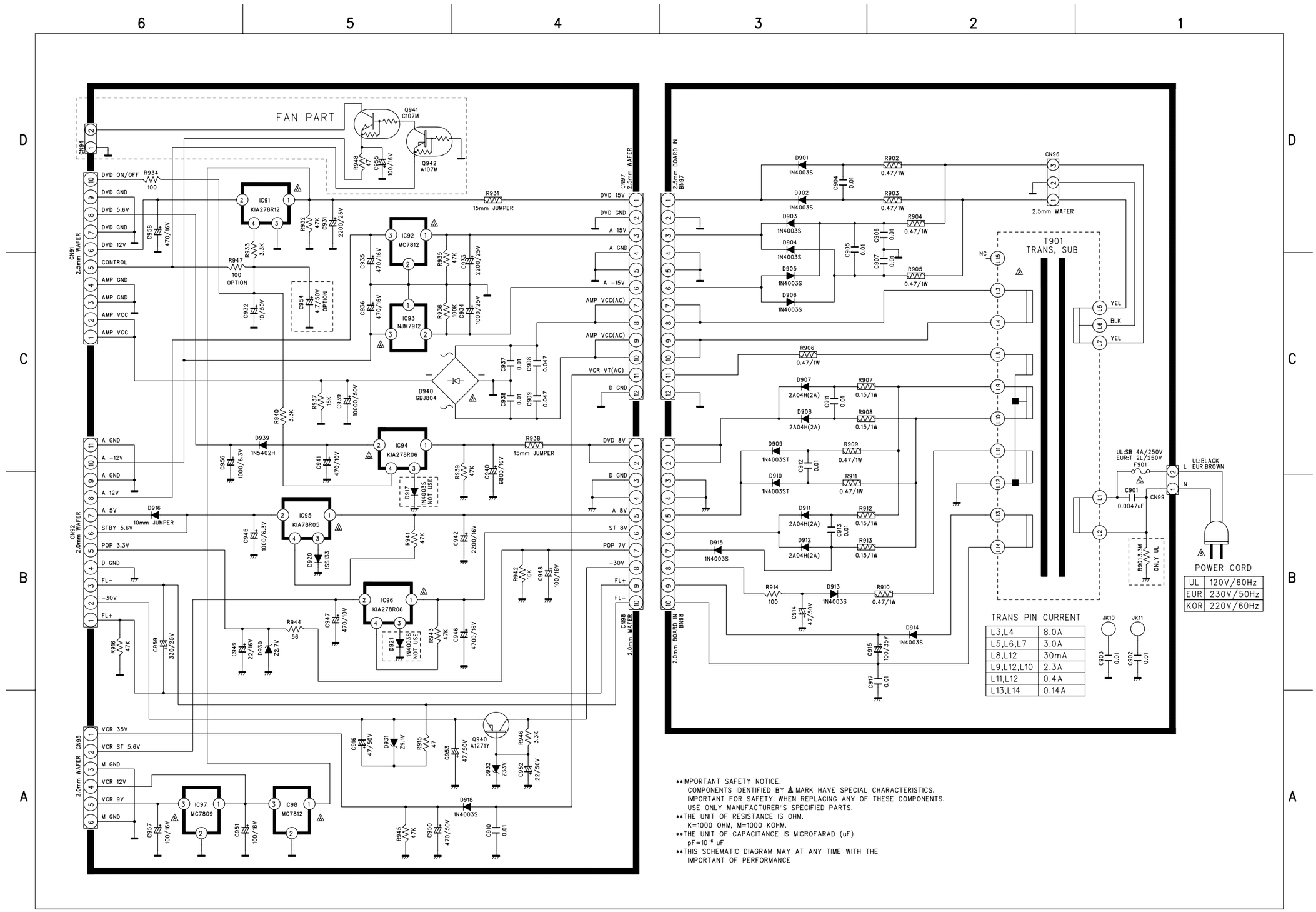

**IMPORTANT SAFETY NOTICE.
COMPONENTS IDENTIFIED BY ⚠ MARK HAVE SPECIAL CHARACTERISTICS.
IMPORTANT FOR SAFETY. WHEN REPLACING ANY OF THESE COMPONENTS.
USE ONLY MANUFACTURER"S SPECIFIED PARTS.
**THE UNIT OF RESISTANCE IS OHM.
K=1000 OHM, M=1000 KOHM.
**THE UNIT OF CAPACITANCE IS MICROFARAD (uF)
pF=10^{-6} uF
**THIS SCHEMATIC DIAGRAM MAY AT ANY TIME WITH THE
IMPORTANT OF PERFORMANCE

MPEG BOARD

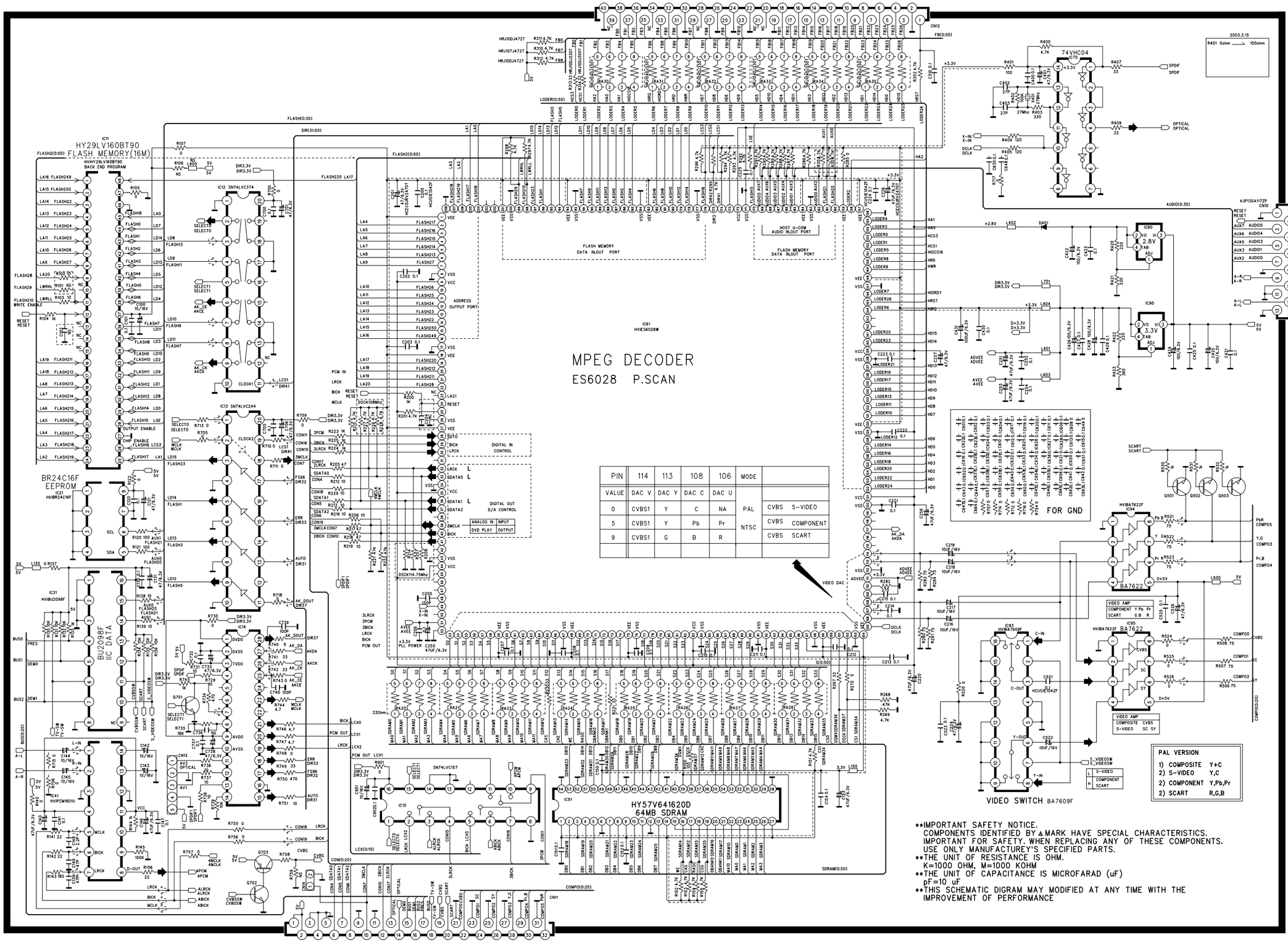

PIN	114	113	108	106	MODE	
VALUE	DAC V	DAC Y	DAC C	DAC U		
0	CVBS1	Y	C	NA	PAL	CVBS S-VIDEO
5	CVBS1	Y	Pb	Pr	NTSC	CVBS COMPONENT
9	CVBS1	G	B	R		CVBS SCART

VCR BOARD

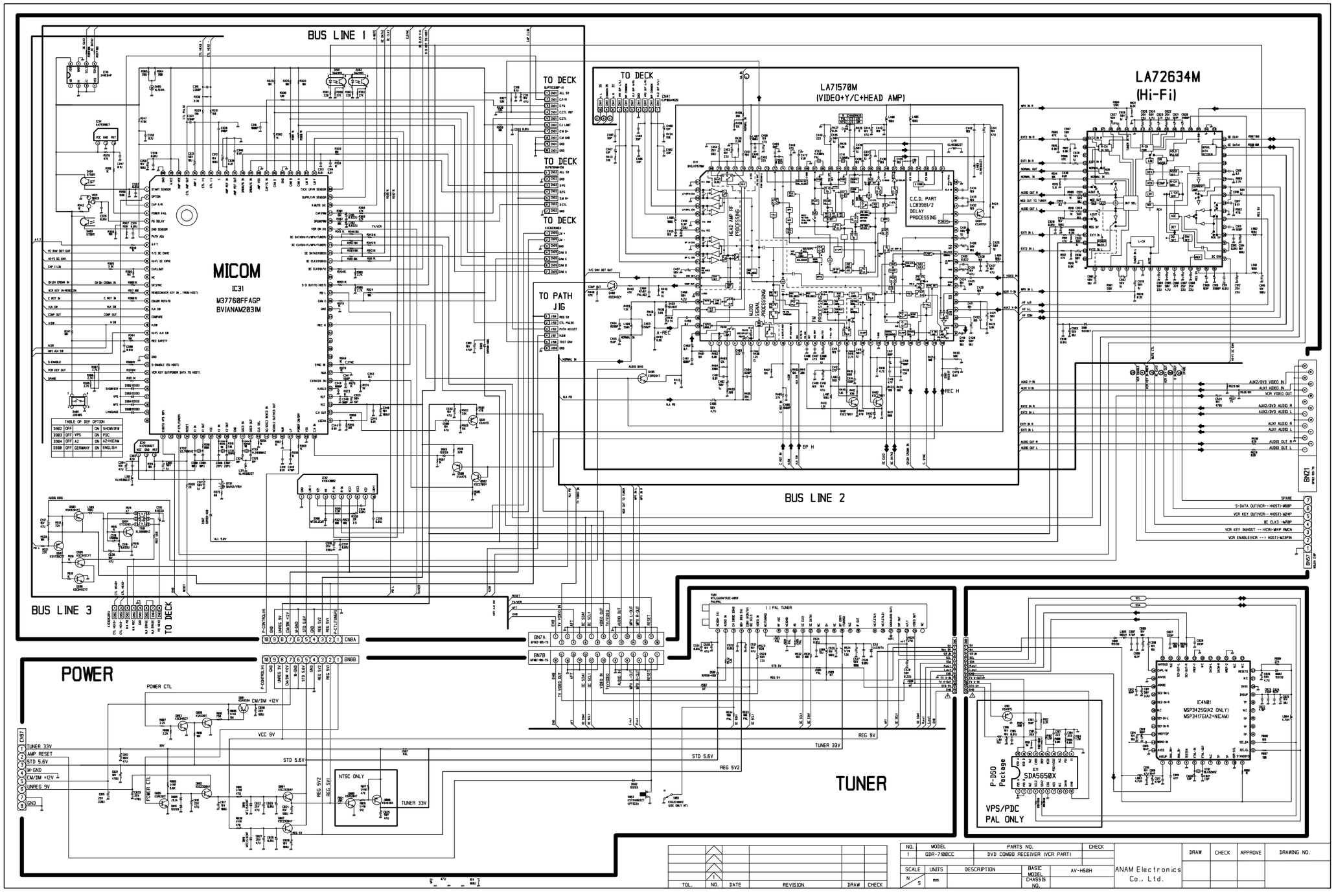

BUS LINE 1
BUS LINE 2
BUS LINE 3
MICOM
IC31
M37760FFAGP
BVIANAM2031M
TO DECK
TO PATH JIG
LA71570M
(VIDEO+Y/C+HEAD AMP)
LA72634M
(Hi-Fi)
C.C.D. PART
LC89981/2
DELAY
PROCESSING
HEAD AMP RF PROCESSING
AUDIO SIGNAL PROCESSING
FM PROCESSING
POWER
POWER CTL
TUNER
NTSC ONLY
VPS/PDC
PAL ONLY
P-DSO Package
SDA5650X
IC4N01
MSP3425G(A2 ONLY)
MSP3417G(A2+NICAM)
TUNER 33V
AMP RESET
STD 5.6V
M-GND
CM/DM +12V
UNREG 9V
GND
VCC 9V
REG 9V
REG 5V2
NO.
MODEL
PARTS NO.
CHECK
1
QDR-7100CC
DVD COMBO RECEIVER (VCR PART)
SCALE
UNITS
DESCRIPTION
BASIC MODEL
AV-H50H
CHASSIS NO.
ANAM Electronics Co., Ltd.
DRAW
CHECK
APPROVE
DRAWING NO.
TOL.
NO.
DATE
REVISION
DRAW
CHECK

ADJUSTMENT OF TAPE TRANSPORTING SYSTEM

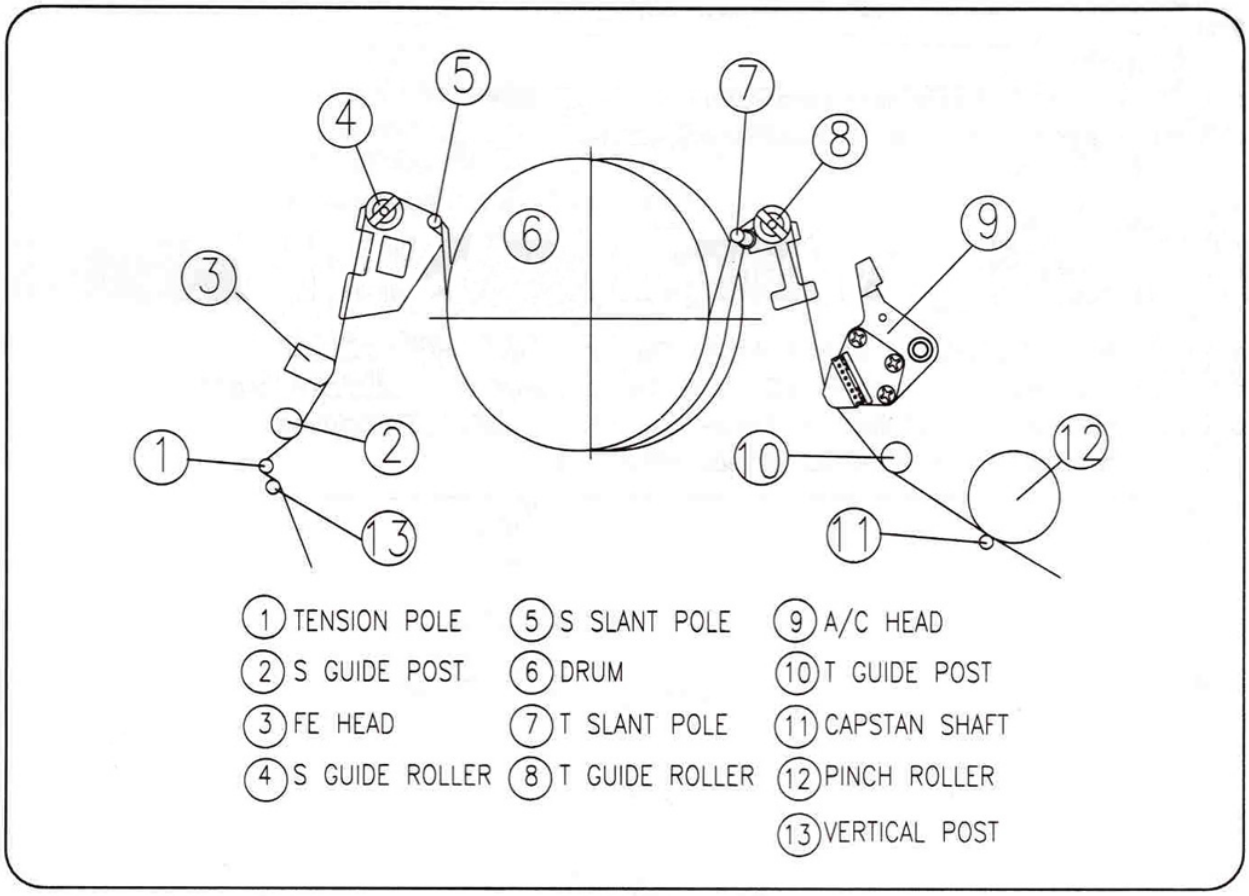

Fig. 1 THE SCHEMATIC DIAGRAM OF TAPE TRANSPORTING SYSTEM

DRUM ENTRANCE/EXIT

*Measuring Point:J151(Head S/W Pulse)
J150(TEST Envelope)

*Adjust Point:S/T Guide Roller

1) Connector the channel-1 scope probe to the Head S/W Pulse Test pin(J151).
2) Connector the channel-2 scope probe (1V/div.)to the Video Envelope Test Pin(J150).
3) Playback the Alignment Tape(Color Bar Signal OR Monoscope Signal).
4) Adjust X-Position(Connect Head S/W and Ch 1 of scope, CTL Pulse(J151) and Ch 2) after that insert SP mode tape into Deck.
Please adjust X-Position BOSS to be same both Timming of Ch 1/Ch 2 at initial Play and Timming after Auto-Tracking

5) Please adjust S/T Guide Roller in order to Flat Frequency of Video Envelope during the Playing.

6) Please Check the Start part and Ending Part Video Envelope Frequency During Auto tracking Function.
If the Frequency was not Flat,Please readjust S/T guide Roller To be Flat.

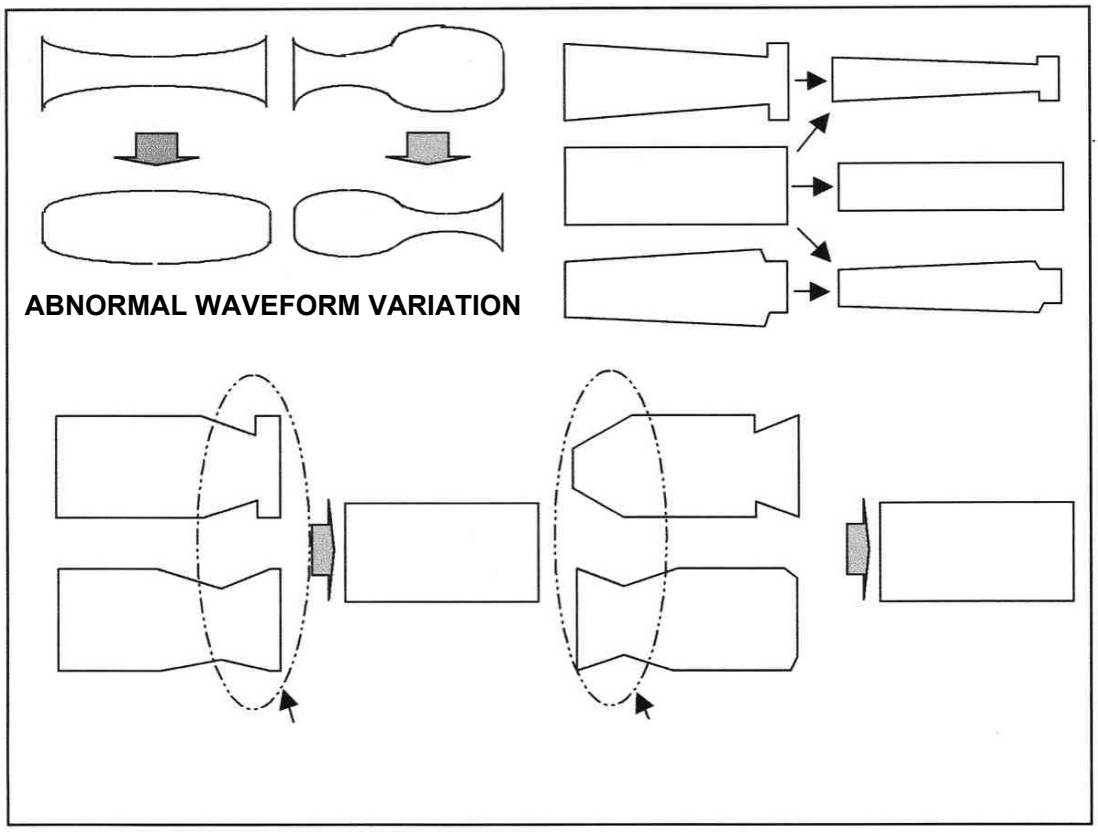

ADJUSTMENT OF THE A/C HEAD A'SSY #1

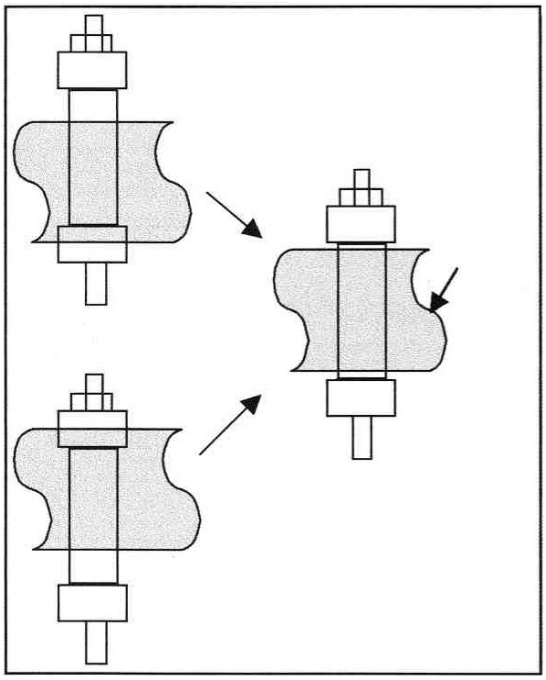

1.TILT Adjustment

a.Play back T-120 Tape and check the running condition of the Tape at the lower flange of the T-guide post ass'y in fig. 1.

b.adjust the a/c head tilt screw untill the Tape runs stable as shown in fig. 3.

*Measuring Point:T-guide post bottom

*Adjust Point:A/C Head Tilt Screw

2.Adjustment of the audio azimuth

a.Play back Alignment Cassette Tape(sp 7kHz).

b.Observe audio signals on an Oscilloscope.

c.Turn the A/C Head Azimuth Screw to obtain the maximum audio output signal(-9~-3dBm)

*Measuring Point:Audio output

*Adjust Point:A/C Head Azimuth screw

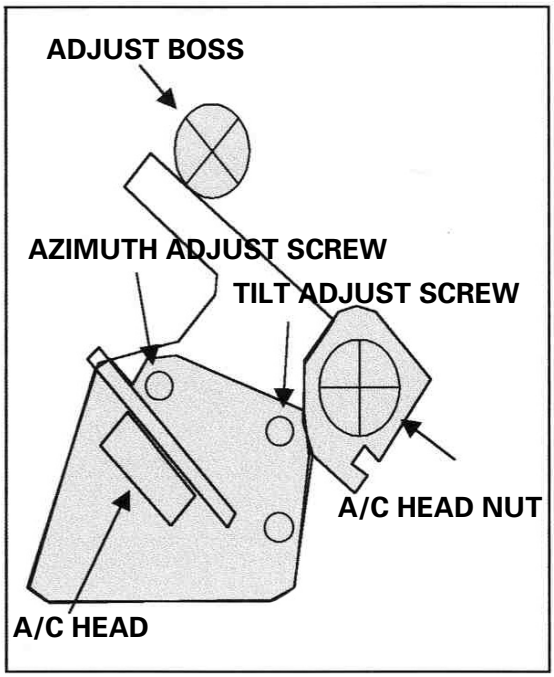

Fig. 4 A/C HEAD A'SSY

ADJUSTMENT OF THE A/C HEAD A'SSY #2

a.Platback a E-180 Tape.

b.Make sure that the gap is 0.25mm between the lower end of Tape and that of A/C Head.

c.When the gap is longer than 0.25mm, turn the A/C Head Height Adjust Nut counter-clockwise. When the gap is shorter than 0.25mm, turn it clockwise.

Repeat this produre until 0.25mm is obtained.

*Measuring Point:Audio output

*Adjust Point:A/C Head Nut

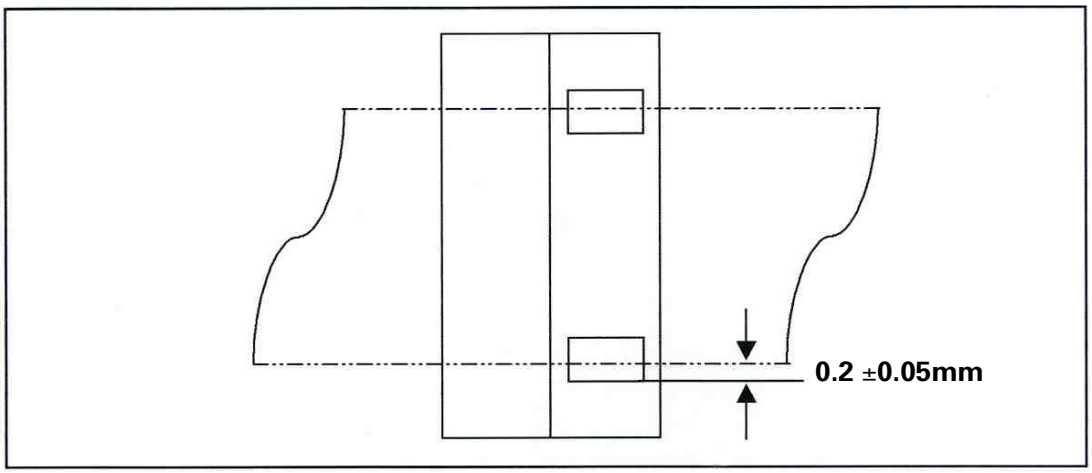

Fig. 5 A/C HEAD HEIGHT ADJUSTMENT

P.G SHIFT ADJUSTMENT

*Measuring Point:J151(Head S/W Pulse)

Video out (Main Circuit Board R527)

*Adjust Point:VR31(100K)Main Circuit Board

Phase genertor(PG) shift decides the Video Head switching point When Tape is played back in case the phase genertor(PG) shifter isn't correctly tuned, Head switching noise or vertical jitter may occur.

1) Connector the channel-1 scope probe to the Head S/W Pulse Test pin(j151).
2) Connector the channel-2 scope probe(1V/div.)to the Video out(R527).
3) Play back the Alignment Tape (Color Bar Signal Or Monoscope signal).
4) Adjust the PG Volume for interval of 6.5H±0.5H.

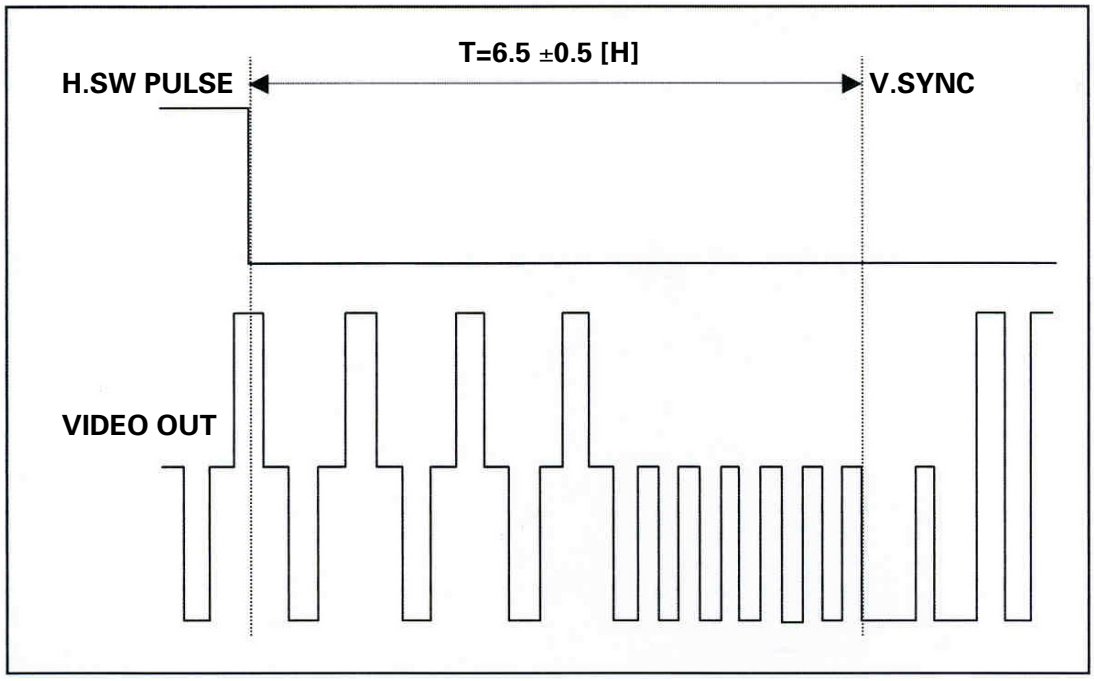

X-POSITION

*Measuring Point:J150(TEST Envelope)
*Adjust Point:X-POSITION ADJUST BOSS

1) Connector the channel-1 scope probe (1V/div.)to the Video Envelope Test Pin(J150).
2) Playback the Alignment Tape(Color Bar Signal OR Monoscope Signal).
3) Operating CH Up/Down Key of Remote Controller during Playing back Manual Tracking Center Bar OSD to br the center of Screen.
4) Please Make Video Envelope Signal connected CH1 a Maximum Waveform by Adjusting X-Posion BOSS.
5) Please Check Manual Tracking OSD is in the Center of Screen After Auto-Tracking.
6) If the posion is misadjusted, Please repeat from 1) to 5).